COMPLETE line

2022

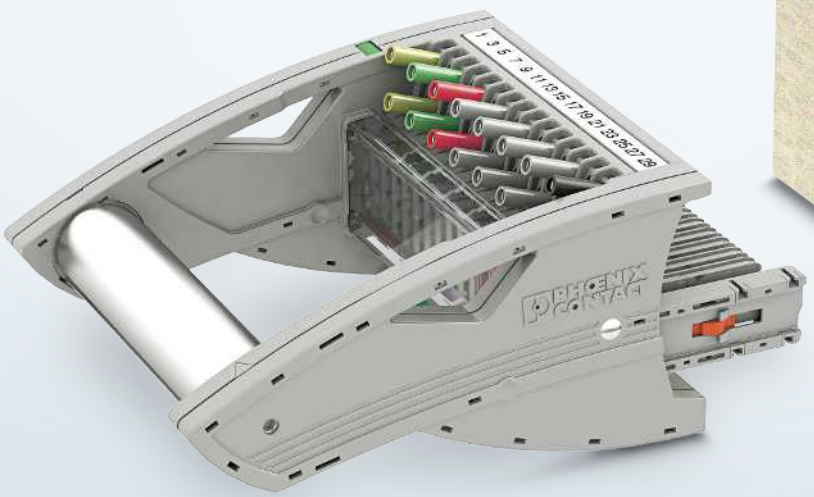

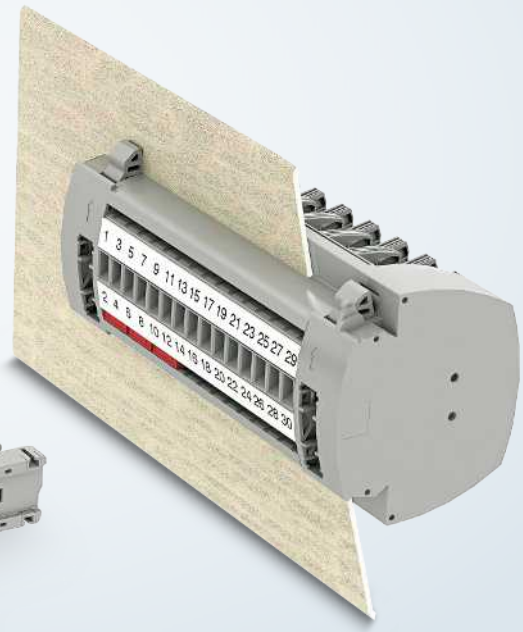

Plug-in test systems

FAME plug-in test system and transformer terminal blocks

PHOENIX CONTACT
INSPIRING INNOVATIONS

The modular system kit for energy technology

Phoenix Contact has been providing tailored solutions for current transformer and voltage transformer applications for decades. In addition to various terminal blocks and test-disconnect terminal blocks, our portfolio also includes various plug-in test systems under the FAME brand.

1 Test-disconnect terminal blocks

Measuring transducer disconnect terminal blocks are specifically tailored to the test circuits in current and voltage transformer secondary circuits. Manual switching operations short circuit current transformers prior to measurements being taken.

More information starting on page 12

2

FAME plug-in test systems

The FAME plug-in test systems are a further development of the test-disconnect terminal blocks. With the modular systems, you can now perform manual testing operations automatically and safely. By constantly optimizing the different FAME versions, we can always offer you the right solution now and in the future.

More information starting on page 18

Contents

Comparison of test-disconnect terminal blocks and plug-in test systems	4
Test-disconnect terminal blocks	12
FAME plug-in test systems	18
FAME 1	26
FAME 2	32
FAME 3	40
FAME 3 SL	46
FAME 3 RACK	50

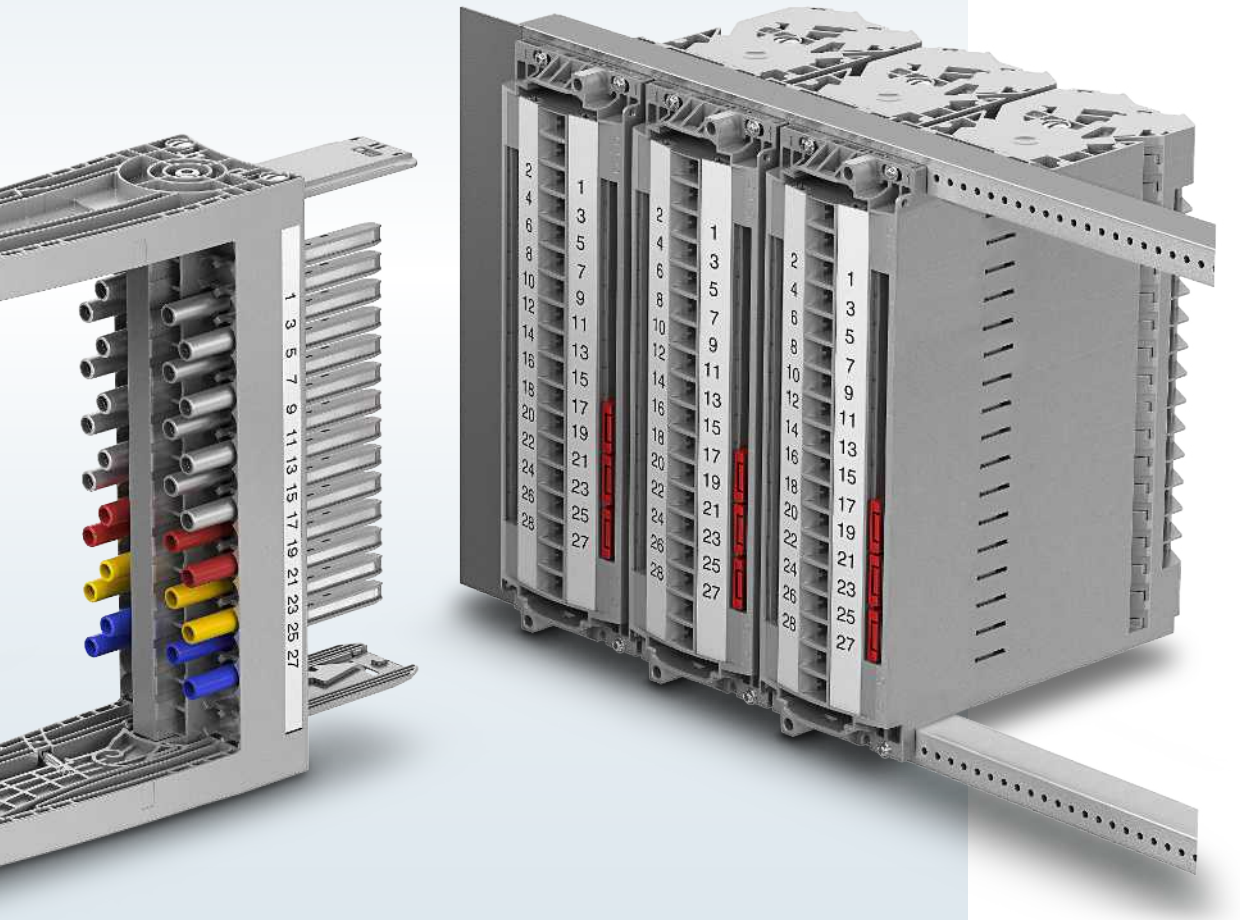

Comparison of test-disconnect terminal blocks and plug-in test systems

Transformer terminal blocks

The ME series test-disconnect terminal blocks of the CLIPLINE complete system enable the easy and individual structuring of measuring transducer sets. The plug-in accessories for testing and short circuiting the current transformers as well as the potential distribution can be placed inside the terminal strip, depending on the application. All switching statuses within the terminal strip are clearly visible.

Consistent use of pluggable CLIPLINE complete system accessories helps to reduce mounting and storage costs. In addition, this series is available with push-in, screw, and spring-cage connection technology. The current and voltage transformers are particularly easy to wire thanks to the pluggable measuring transducer disconnect terminal blocks.

When the patented current transformer plugs are removed, an automatically leading short circuit is ensured. By using the appropriate coding and strain relief accessories, the measuring transducers can also be connected in a modular and plug-in fashion. This means that these test-disconnect terminal blocks are ideally suited to control and measuring technology – from the counter (smart metering) right through to the secondary technology of switchgear and power stations.

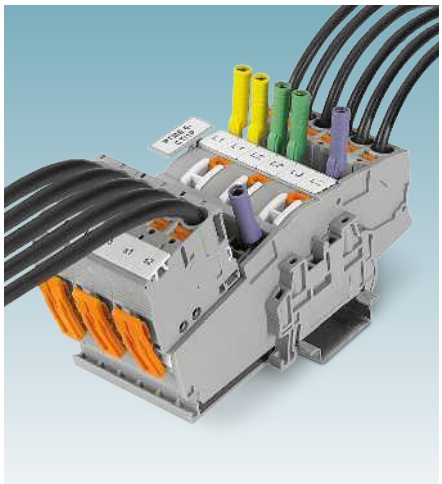

PTME 6/1P terminal blocks

Plug-in test systems

FAME is the innovative plug-in test system for all measuring and testing tasks in network protection technology for medium and high-voltage switchgear.

The system consists of a plug-in test socket with test plugs built into the control cabinet panel. With this modular system, you can now perform manual testing operations automatically, safely, and more quickly. Suitable for every application, the modular system can be directly integrated into the control cabinet panel or 19" rack, depending on the product. With its modular, configurable design, FAME is a flexible system that can be used to implement different number of positions. This means that the FAME right solution is available for every circuit diagram.

The plug-in test systems are designed for touch protection for the IP20 degree of protection. Panel mounting enables installation in the control cabinet door. This enables tests to be carried out without having to access the interior of the control cabinet (wiring level), meaning that the possibility of modifications or manipulation is eliminated. The transformer short circuit is at the heart of the system. If the short-circuit bridge is pre-installed, the transformer short circuit is automatically established when the operating plug is pulled and when the test plug is plugged. This significantly improves the safety levels during testing and saves time as well. The system is configured for current transformer and voltage transformer applications using accessories from the CLIPLINE complete system.

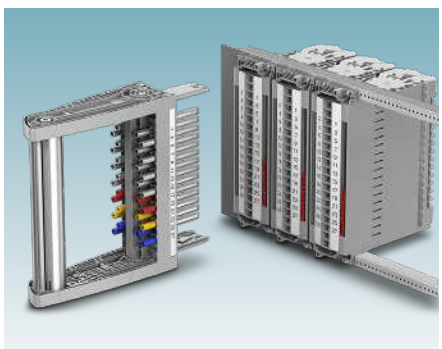

FAME 3 RACK

Comparison of test-disconnect terminal blocks and plug-in test systems

Characteristics	Test-disconnect terminal blocks	Plug-in test systems
Flexibility	Greater flexibility with individual terminal strip design	Preconfigured functionality of the plug-in test socket
Handling	Serial switching operation with manual transformer short-circuits	Parallel switching operation with automatic transformer short-circuits
Clear arrangement	Large-surface marking options and easily identifiable switching states	
Shock protection	Protection against contact in accordance with IEC 60529	Protection against contact in accordance with IEC 60529
Space requirements	Narrow and compact design	Space-saving with option for door or panel mounting
Connection technologies	Push-in connection, screw connection, spring-cage connection, ring cable lug connection, and COMBI plug-in connection	Push-in connection, screw connection, and ring cable lug connection
Transformer short circuit	Manually with short-circuit bridge or plug	Automatic with configuration with plug-in bridges
Automatic leading transformer short circuit	Depending on the design	Yes
Tamper protection	Customizable sealable covers	Precisely fitting sealable covers
Testing work for individual tests (time)	Medium – switching and test sequence to be executed serially	Low – switching and test sequence executed via plugging process
Testing work for series testing (time)	High – repetitive test setup with subsequent switching and test sequence	Low – one-time test setup, repetitive time-saving test plugging process
Test procedure (safety)	Test procedure with the control cabinet open, thus requiring a second person.	Increased protection with test procedure with closed control cabinet door

FAME plug-in test systems for the control cabinet door and test-disconnect terminal blocks for control cabinet installation.

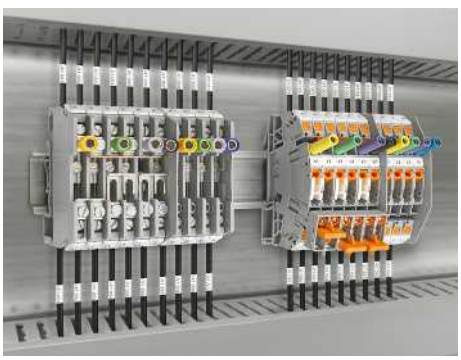

The new test-disconnect terminal blocks can be used to design space-saving and modular switchgears. The test-disconnect terminal blocks are available with different connection technologies.

The FAME plug-in test systems enable easy testing even outside the control cabinet. This means that you can perform testing in the field of mains protection technology safely and in no time at all.

Standardized bridge accessories

Flexible plug-in bridge system

One plug-in bridge for all connection technologies. To enable fast and individual potential distribution, the terminal blocks of the CLIPLINE complete system have special function shafts. They are arranged in a line across all the terminal blocks, allowing the connection technologies to be combined. Furthermore, the bridge accessories can be used for the FAME plug-in test systems, for example, to enable setting star points.

Standardized plug-in bridges
The 2- to 50-pos. plug-in bridges allow you to save time when carrying out any potential-bridging tasks. The pincer design means that the plug-in bridges fit securely in the function shaft and can only be released with the aid of a screwdriver.

Star-point bridging
The bridge system has ready-made star-point bridges to enable star-point bridging. The bridges are designated as FBS 1/3/5-8 or FBS 1/4-8, for example. The 8 indicates the pitch of the terminal block and the other numbers indicate the positions of the contact tabs.
Another option for star-point bridging is made possible by the standard plug-in bridges. To enable this, the contact tabs that are not needed have to be removed using pliers. A marking segment has been incorporated on the top of the bridge to indicate that a contact have been skipped. You can simply mark the contact points accordingly with a pen.

Bridge bars
The plug-in bridge bars are particularly interesting for transformer circuit applications. The switchable bridges can be switched quickly and easily using a screwdriver, without having to remove the bridge. The bridges thus serve as a quick and removable connection between adjacent terminal blocks.

Plug-in bridges with extraction tool
In addition to standard plug-in bridges, the bridging system includes short-circuit bridges with an extraction tool (FBSRH). The extraction tool allows you to easily remove the plug-in bridge without using an additional tool. These bridges are particularly useful for testing applications where the plug-in bridge is not plugged in for permanent use.

Test-disconnect terminal blocks with various connection technologies

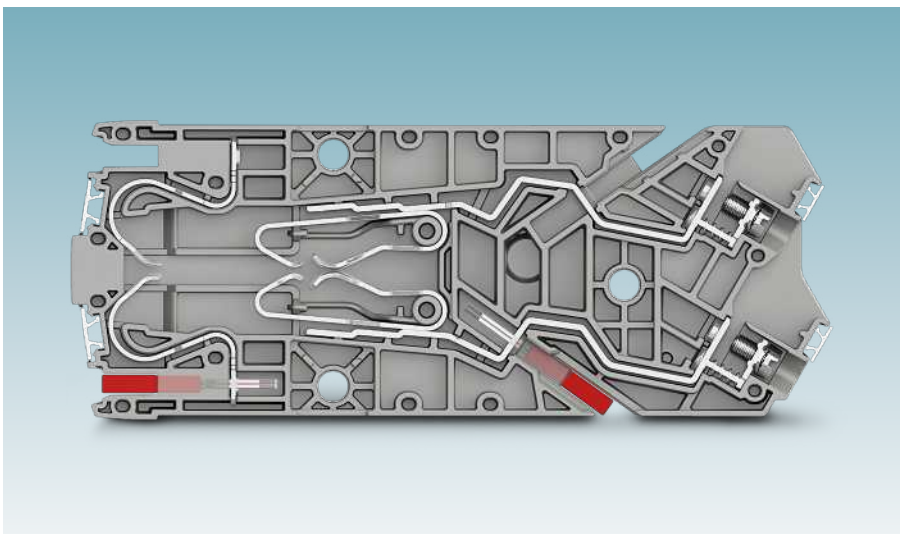

Single plate of the FAME 3 RACK plug-in test socket

Standardized marking and test accessories

Marking accessories

The CLIPLINE complete system includes large-surface marking options. This is essential for clear wiring and commissioning. Marking simplifies wire and terminal assignment when carrying out testing and maintenance activities, and makes the control cabinet safer for your installers. The marking material is also used in the plug-in test system.

Group and terminal strip marking
Optional snap-on, large-surface marker carriers are available for group and terminal strip marking. In conjunction with the corresponding marking accessories, they support quick and easy identification of the individual modules.

Terminal marking
In addition to terminal strip marking, the system also includes numerous marking materials for the individual terminals and terminal points. This material is also used for the plug-in test systems.

Wire marking
In addition, the marking system features numerous types of wire markings. This further simplifies the assignment of wires and terminal points.

Warning labels
In addition to special warning labels for terminal blocks, the marking portfolio also includes warning labels for devices and systems. This can increase the safety in your company even further.

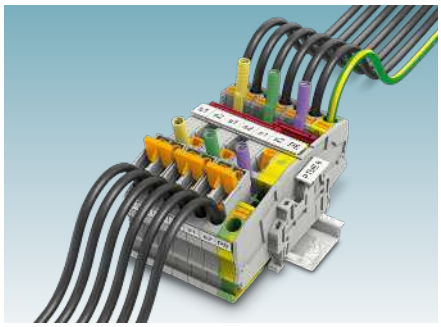

PTME test-disconnect terminal blocks

FAME 3 RACK blind plugs and plug-in test sockets

Test system

The CLIPLINE complete system includes a comprehensive range of test accessories. All test plugs and test sockets make contact in the freely accessible function shaft or in the test points intended for this purpose.

Test adapters
Test adapters are primarily intended for 4 mm safety measuring cables. They come in a wide selection of forms and colors, with the right test adapter available for every field of application. The test adapters of the terminal blocks and plug-in test systems have different mounting versions. The PSBJ... adapters can be screwed into the test plugs of the plug-in test systems or into special transformer terminal blocks. The PAI-... test plug adapters, on the other hand, are equipped with the scissor mechanism similar to the standard bridges and can be clamped in the function shaft.

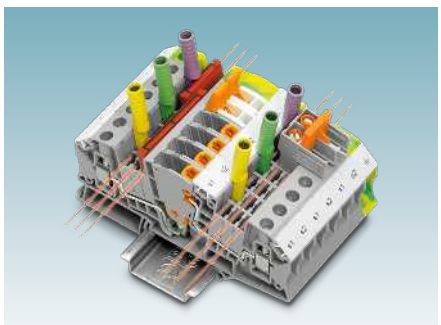

Transformer terminal block with 6 function shafts

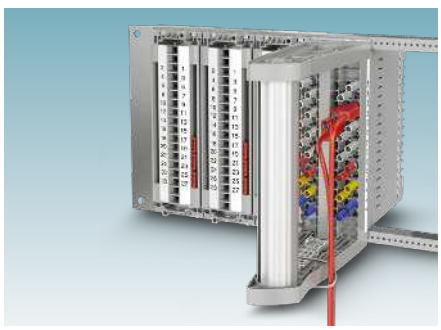

Test plug of the FAME 3-RACK system

Push-in connection technology

Push-in connection – test-disconnect terminal blocks and plug-in test systems

Connection principle
PT push-in connection terminal blocks have been developed for direct conductor connection. This means that rigid conductors or conductors with ferrules are inserted directly into the terminal block without using any tools.

The special spring profile allows the easy insertion of conductors with ferrules and rigid conductors from 0.34 mm² to 185 mm². The contact spring is opened automatically when the conductor is inserted. This provides the required pressure force against the current bar. The spring is opened by a push button, either to release conductors or to connect flexible conductors without a ferrule, starting from 0.14 mm². This is done easily and without direct contact with live parts. The button can be operated with all standard screwdrivers. The PT connection technology has been tested and approved for a wide range of approvals. These include, for example, vibration resistance in accordance with railway standard EN 50155 as well as shock and corrosion resistance in accordance with current shipbuilding registers. The connection technology is also certified for process engineering in areas with increased safety (Ex e).

Your advantages

- ☑ Time-saving conductor connection of pretreated and rigid conductors with tool-free direct-connection technology
- ☑ Convenient plugging with lower insertion force
- ☑ Safe wiring and operation with color-coded push button
- ☑ Connection of all conductor types with convenient front connection
- ☑ The conductor can be easily released without special tools
- ☑ Reduction in logistics costs with the uniform CLIPLINE complete system accessories

Phoenixcontact.com/
PT-connection-video

Clamping principle of a push-in terminal block

Terminal block with PT Push-in connection

FAME 2 plug-in test socket with PT connection

Screw connection technology

Screw connection – transformer terminal blocks and plug-in test systems

UT connection principle
UT screw connection terminal blocks are designed for the most stringent requirements. For more than 80 years, they have proven themselves a billion times over in all manner of applications. An important characteristic is the maintenance-free conductor connection. There is no need to tighten the terminal screws. The screws are prevented from loosening by the Reakdyn principle, a screw locking mechanism developed and patented by Phoenix Contact. Conductors for Phoenix Contact UT screw connection terminal blocks can be clamped without pretreatment. Splicing protection can also be implemented in the form of ferrules. A special characteristic of the screw clamping body is the multi-conductor connection, which is also often required. Very large conductor cross-sections up to 240 mm² can also be wired gas-tight and with long-term stability with the high contact forces.

Ring cable lug connection with hexagon screw
The FAME 3 and FAME 3 SL plug-in test systems feature ring and fork-type cable lug connections. During connection, the respective cable lug is positioned and fixed with the help of a hexagon screw.

Ring cable lug connection with captive screw
The screw connection with captive screw is also featured in the FAME 3 RACK plug-in test system. The cable lugs are attached to the plug-in test socket via a simple screw. The screw is firmly integrated into the system via a spring-loaded holder. Thus, the wiring convenience is further increased.

Your advantages

- ☑ Screw connection globally recognized and proven throughout the world
- ☑ Integrated screw locking mechanism
- ☑ Maintenance-free and vibration-resistant
- ☑ Space saving and flexible with the connection of two identical conductors
- ☑ Long-term stable connection with the use of high-quality materials

Phoenixcontact.com/
UT-connection-video

Connection principle of a screw terminal block

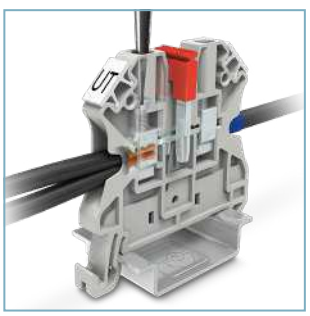

Terminal block with UT screw connection

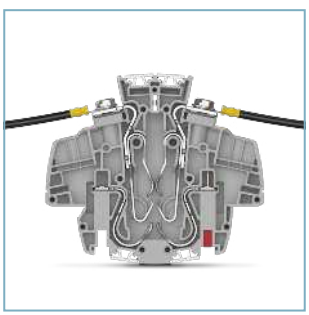

FAME 3 plug-in test socket with RSC ring cable lug connection

Spring cage connection technology and plug-in connection technology

ST spring-cage connection – transformer terminal blocks

Connection principle
ST spring-cage terminal blocks were developed for universal spring-loaded conductor contacting. The contact force is independent of the user and creates a vibration-resistant, gas-tight connection with long-term stability. The terminal point is opened with a standard screwdriver. After the conductor has been inserted into the clamping space, the screwdriver is removed and the conductor automatically makes contact. The front connection, with the conductor and screwdriver coming from the same direction in parallel, ensures convenient operation. All types of copper conductors up to 35 mm² can be clamped without any pretreatment. Splicing protection can also be implemented in the form of ferrules. Spring-cage terminal blocks from Phoenix Contact provide a large amount of space. This makes it possible to wire conductors with ferrules and insulating collars with a nominal cross-section.

Phoenixcontact.com/
ST-connection-video

Clamping part of a spring-cage terminal block

Terminal blocks with ST spring-cage connection

COMBI plug-in connection – transformer terminal blocks

Connection principle
COMBI plug-in connections are designed for the most stringent universal demands in terms of plug-in capability. The nominal current of the connected conductor is carried through the plug-in contact. The uniform plug-in zone is an important characteristic. Connectors and basic terminal blocks in four connection technologies can be freely combined with each other due to the uniform plug-in zone. The modular structure also enables individual self-assembly of the plugs and the couplings. All kinds of copper conductors can be connected without pretreatment. Splicing protection can also be implemented in the form of ferrules. COMBI connectors in all connection technologies provide a large amount of space. This makes it possible to wire conductors with ferrules and insulating collars with a nominal cross-section.

Phoenixcontact.com/
COMBI-connection-video

Clamping part of a plug-in COMBI terminal block

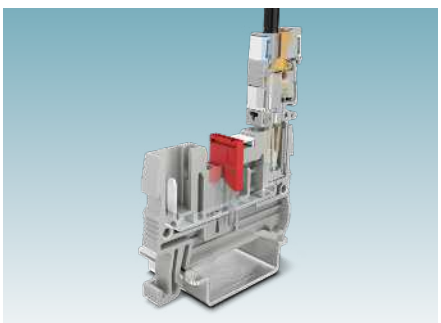

Terminal blocks with plug-in connection

RT bolt connection – transformer terminal blocks

Connection principle
RT bolt connection terminal blocks have been developed with a robust design and offer convenient wiring for ring cable lugs. An important characteristic is the hinged cover with captive cap nut. It ensures quick and easy ring cable lug wiring. The integrated screw locking mechanism in the form of a spring retainer guarantees safe use, even in applications that are subject to shock and vibration. All ring cable lugs can be connected in accordance with DIN 46234, DIN 46235, or DIN 46237. A special characteristic of the bolt connection is the often required multi-conductor connection, on which up to four cable lugs can be connected per bolt. Safe wiring of all kinds of conductors up to 300 mm² with long-term stability.

Your advantages

- Considerable conductor pull-out forces due to high contact force and large contact surfaces
- Safety for users, thanks to integrated touch protection
- Easy potential distribution with time-saving plug-in bridge system
- Quick ring cable lug wiring due to the hinged cover
- Comprehensive range of accessories: standardized for bridging, testing, and marking

Phoenixcontact.com/
RT-connection-video

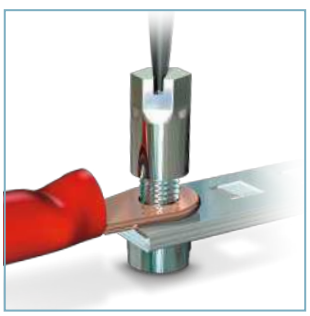

Connection principle of a bolt terminal block

Terminal block with RT bolt connection

Test-disconnect terminal blocks

1

The new test-disconnect terminal blocks can be used to design space-saving and modular switchgears. In addition to the disconnect terminal blocks, feed-through and PE terminal blocks of the same shape are available. You can work particularly conveniently and safely with the patented short-circuit plug. Measuring transducers are protected against damage by means of automatic short circuit.

Your advantages

- Maximum functionality with six universal function shafts
- Easy and safe operation with clear identification and latching of the disconnector
- Reliable protection of connected current transformers with plug versions with leading short-circuit contact

Easy and safe isolation

The section disconnector reliably makes contact and latches with a swiveling movement in the respective switching state. Printed switching symbols and optional switching locks ensure a clear overview within the measuring transducer terminal strip.

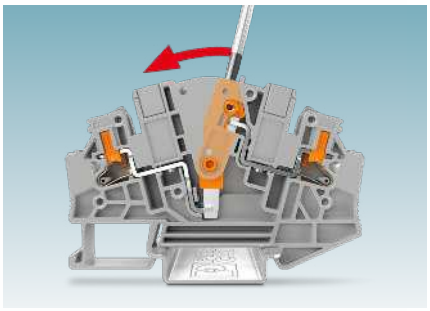

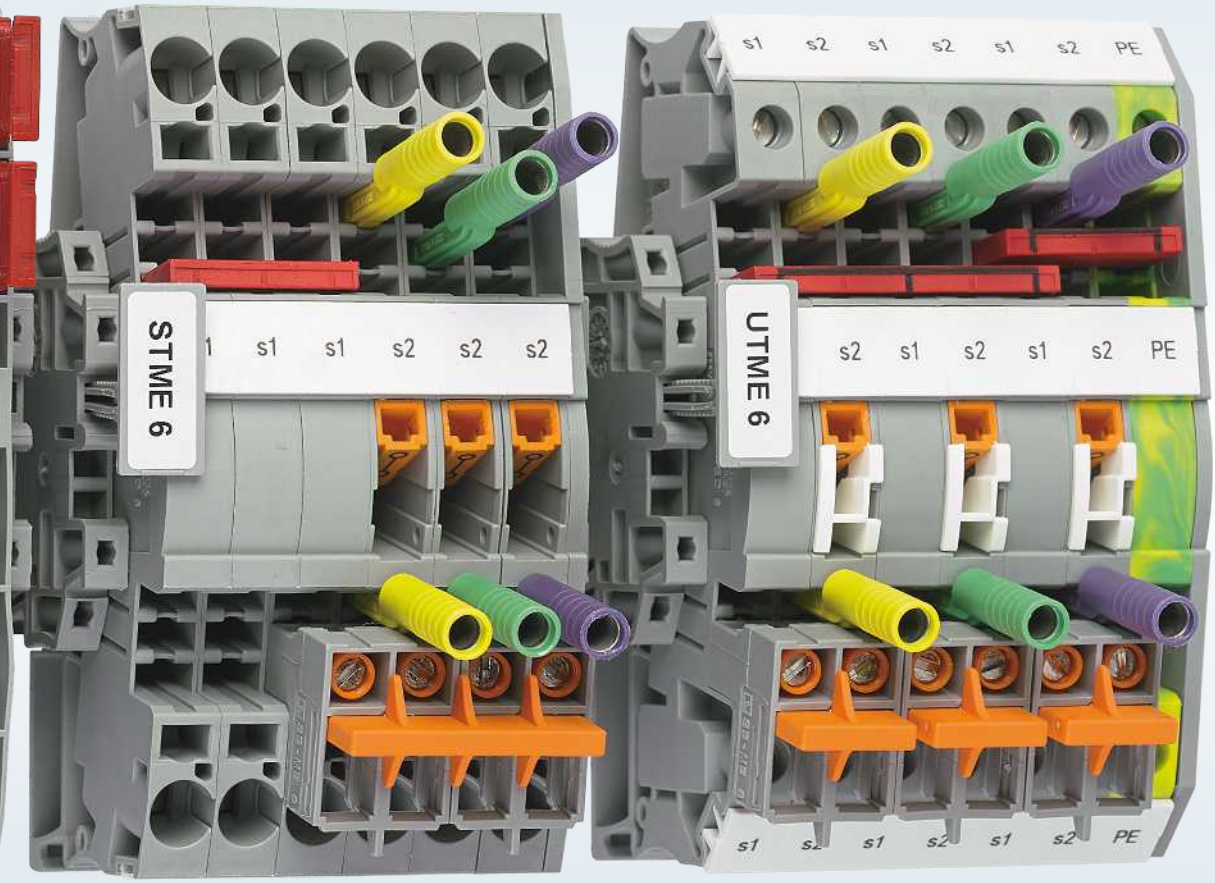

Transformer terminal block product overview

Test-disconnect terminal blocks (2-conductor)			Connection method versions		
			Technology	Type	Item no.
	Type / Item no.	PTME 4 3212139	Screw connection Screw connection	UTME 4 UTME 4-P/P	3047452 3047453
	Connection method	Push-in connection			
	Blue color version	PTME 4 BU 3212148			
	Current / voltage	24 A / 500 V			
	Cross-section range mm² / AWG	0.2 mm² … 4 mm² / 24 … 12			
	Type / Item no.	PTME 6 3212170	Push-in connection Push-in connection Screw connection Spring-cage connection 3035700	PTVME 6/S PTVME 6/S-P UTME 6 STME 6	1164788 1166809 3047400
	Connection method	Push-in connection			
	Blue color version	–			
	Current / voltage	30 A / 500 V			
	Cross-section range mm² / AWG	0.5 mm² … 6 mm² / 20 … 10			
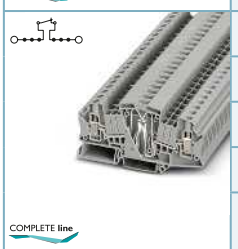	Type / Item no.	UTME 6-SD 3047420			
	Connection method	Screw connection			
	Blue color version	–			
	Current / voltage	30 A / 500 V			
	Cross-section range mm² / AWG	0.2 mm² … 10 mm² / 24 … 8			
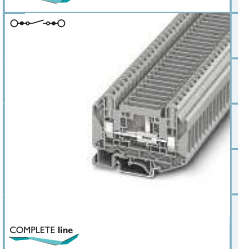	Type / Item no.	UT 6-T-HV 3070134	Screw connection	UT 6-T-HV P/P	3070121
	Connection method	Screw connection			
	Blue color version	–			
	Current / voltage	41 A / 1000 V			
	Cross-section range mm² / AWG	0.2 mm² … 10 mm² / 24 … 8			
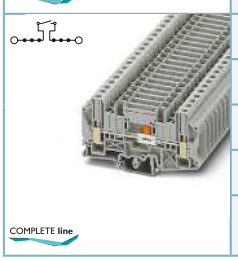	Type / Item no.	UT 6-T/SP 3072815	Screw connection	USST 6-T/SP	3070330
	Connection method	Screw connection			
	Blue color version	UT 6-T/SP BU 3072822			
	Current / voltage	41 A / 1000 V			
	Cross-section range mm² / AWG	0.2 mm² … 10 mm² / 24 … 8			

Important note

The technical data in the product tables relates to the specified reference item. It may differ slightly for connection versions in some cases.

You will find the exact and complete data for the individual items in our online shop. There is also a list of corresponding accessories provided for each item.

Transformer terminal block product overview

Plug-in test-disconnect terminal blocks			Connection method versions		
			Technology	Type	Item no.
	Type Item no.	UTME 4/1P 3057416			
	Connection method	Screw / plug-in connection			
	Blue color version	–			
	Current / voltage	28 A / 500 V			
	Cross-section range mm² / AWG	0.14 mm² … 6 mm² / 26 … 10			
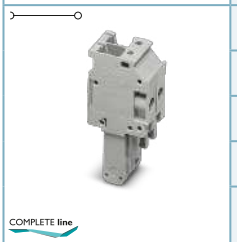	Type Item no.	UP 4/ 2 3060128			
	Connection method	Screw connection			
	Blue color version	–			
	Current / voltage	32 A / 800 V			
	Cross-section range mm² / AWG	0.2 mm² … 6 mm² / 24 … 10			
	Type Item no.	UTME 4-CT/1P 3057432			
	Connection method	Screw / plug-in connection			
	Blue color version	–			
	Current / voltage	28 A / 500 V			
	Cross-section range mm² / AWG	0.14 mm² … 4 mm² / 26 … 12			
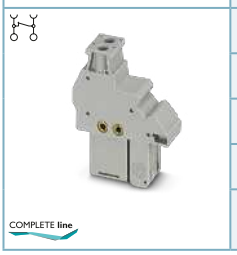	Type Item no.	UPCT 4/2 3057461			
	Connection method	Screw connection			
	Blue color version	–			
	Current / voltage	20 A / 320 V			
	Cross-section range mm² / AWG	0.14 mm² … 6 mm² / 26 … 10			

Transformer terminal block product overview

Plug-in test-disconnect terminal blocks				Connection method versions		
				Technology	Type	Item no.
	Type	Item no.	PTME 6/1P	3212306			
	Connection method		Push-in connection			
	Blue color version		–			
	Current / voltage		30 A / 500 V			
	Cross-section range mm² / AWG		0.5 mm² … 6 mm² / 20 … 10			
	Type	Item no.	PP-H 6/ 2	3061570		
	Connection method		Push-in connection			
	Blue color version		–			
	Current / voltage		41 A / 1000 V			
	Cross-section range mm² / AWG		0.5 mm² … 6 mm² / 20 … 10			
	Type	Item no.	PTME 6-CT/1P	3212300		
	Connection method		Push-in connection			
	Blue color version		–			
	PE version		PTMED 4-PE	3212154		
	Current / voltage		30 A / 500 V			
	Cross-section range mm² / AWG		0.5 mm² … 6 mm² / 20 … 10			
	Type	Item no.	PPCT 6/2	3212304		
	Connection method		Push-in connection			
	Blue color version		–			
	Current / voltage		20 A / 320 V			
	Cross-section range mm² / AWG		0.5 mm² … 6 mm² / 20 … 10			

Feed-through terminal blocks (2-conductor)				Connection method versions		
				Technology	Type	Item no.
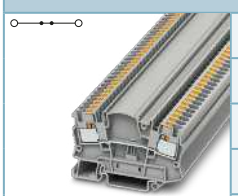	Type	Item no.	PTMED 4	3212141	Screw connection	UTMED 4	3047465
	Connection method		Push-in connection			
	Blue color version		–			
	Current / voltage		32 A / 500 V			
	Cross-section range mm² / AWG		0.2 mm² … 4 mm² / 24 … 12			
	Type	Item no.	PTMED 6	3212183	Screw connection	UTMED 6	3047413
	Connection method		Push-in connection		Spring-cage connection	STMED 6	3035713
	Blue color version		–			
	PE version		PTMED 6-PE	3212196		
	Current / voltage		41 A / 1000 V			
	Cross-section range mm² / AWG		0.5 mm² … 6 mm² / 20 … 10			

Transformer terminal block product overview

Feed-through terminal blocks (2-conductor)			Connection method versions		
			Technology	Type	Item no.
	Type Item no.	UTD 6/SP 3072817			
	Connection method	Screw connection			
	Blue color version	–			
	Current / voltage	41 A / 1000 V			
	Cross-section range mm² / AWG	0.2 mm² … 10 mm² / 24 … 8			
	Type Item no.	PTMED 6-CT/1P 3212301			
	Connection method	Push-in connection			
	Blue color version	–			
	PE version	PTMED 6-CT/1P-PE 3212302			
	Current / voltage	30 A / 500 V			
	Cross-section range mm² / AWG	0.5 mm² … 6 mm² / 20 … 10			

Bolt terminal blocks (2-conductor)			Connection method versions		
			Technology	Type	Item no.
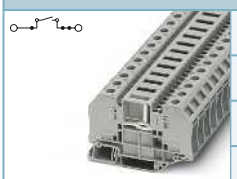	Type Item no.	RT 4-T-P/P 3000565			
	Connection method	Bolt connection			
	Current / voltage	41 A / 500 V			
	Bolt diameter	4 mm			
	Cross-section cable lug connection	4 mm			
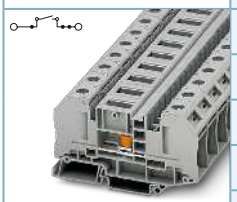	Type Item no.	RT 5-T 3049039			
	Connection method	Bolt connection			
	Current / voltage	41 A / 1000 V			
	Bolt diameter	5 mm			
	Cross-section cable lug connection	5 mm			
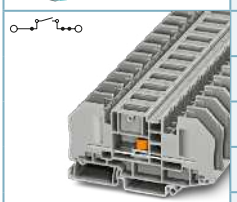	Type Item no.	RTO 5-T 3049233			
	Connection method	Bolt connection			
	Current / voltage	41 A / 1000 V			
	Bolt diameter	5 mm			
	Cross-section cable lug connection	5 mm			

FAME plug-in test systems

2

FAME is the innovative, modular test system for all measuring and testing tasks in network protection technology for medium- and high-voltage switchgear.

You can now perform manual testing operations automatically, safely, and more quickly.

FAME 3 SL

Compact plug-in test system without operating plug and with transformer short circuit in the plug-in test socket.

More information starting on page 46

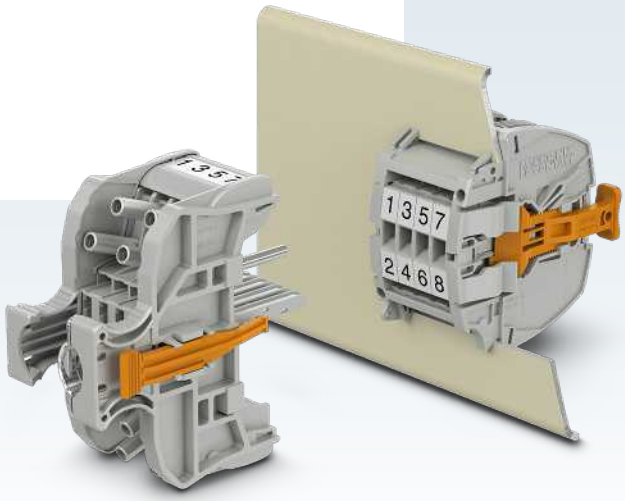

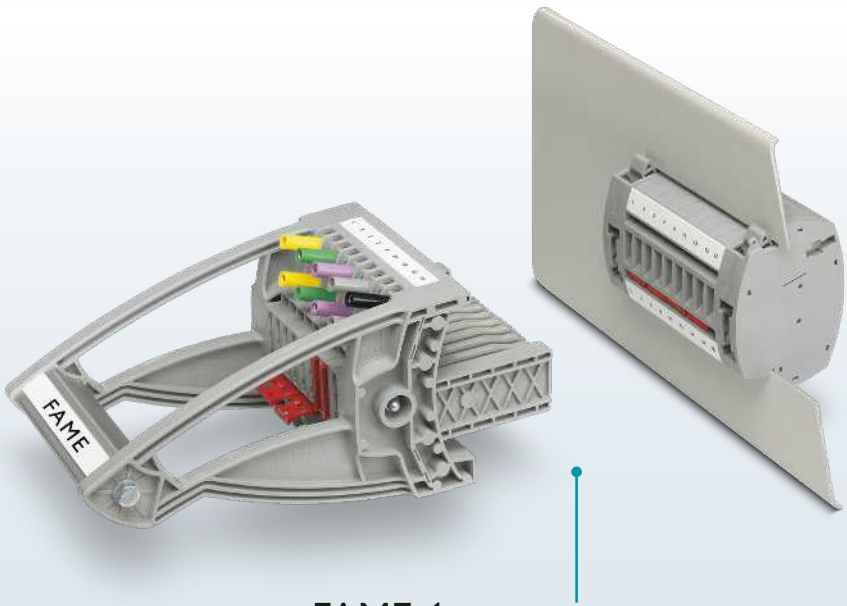

FAME 1

Modular plug-in test system with operating plug and transformer short circuit in the plug-in test socket.

More information starting on page 26

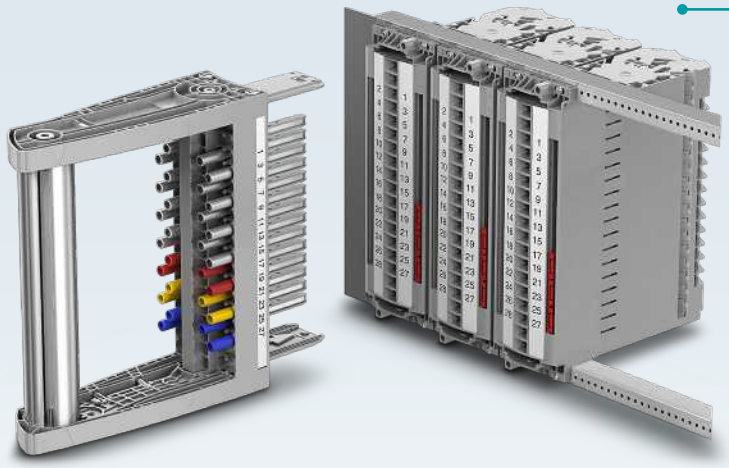

FAME 3 RACK

Modular 19" plug-in test system without operating plug and transformer short circuit in the plug-in test socket.

More information starting on page 50

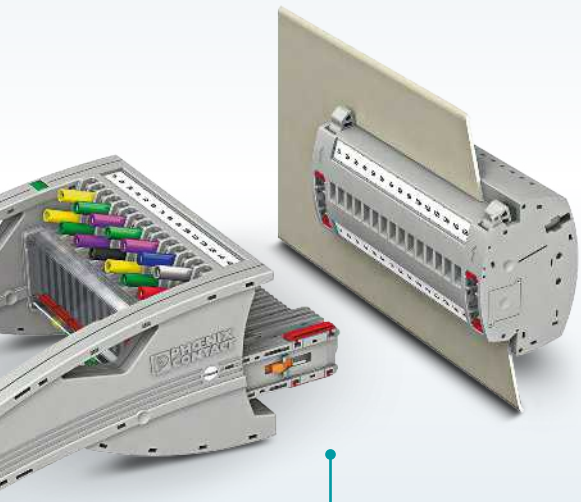

FAME 2

Modular plug-in test system without operating plug and transformer short circuit in the test plug.

More information starting on page 32

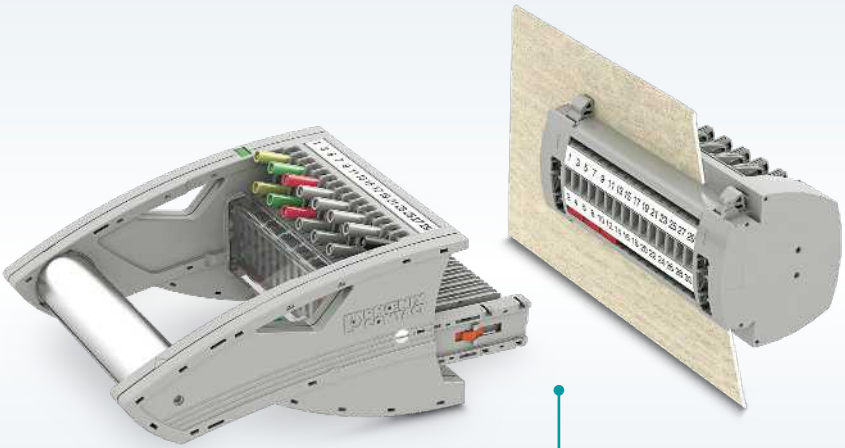

FAME 3

Modular plug-in test system without operating plug and transformer short circuit in the plug-in test socket.

More information starting on page 40

Comparison of plug-in test systems

Plug-in test system	**FAME 1**	**FAME 2**
Operating principle	N/O contact (normally open)	N/C contact (normally closed)
Normal operation	With operating plug	Without operating plug
Transformer short circuit (configuration)	In the plug-in test socket	In the test plug
Configurable switching points	With separate plug-in test sockets	With configured test plugs
Time offset of the switching points	-	With contact tab lengths of the plug
Connection technology of the plug-in test socket	Screw connection or Push-in connection	Screw connection or Push-in connection
Mounting options	Panel cutout	Panel cutout or DIN rail
Plug-in mechanism	Standard plug	Standard plug or rotary handle plug with defined latching positions
Compact plug versions	Yes	No
Optionally with auxiliary contact for status detection	Yes	Yes
Modular numbers of positions	4-13	4-25
Online configurator	No	Yes

	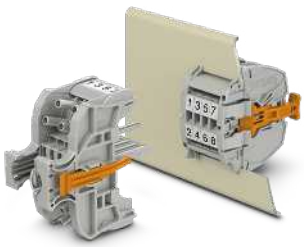	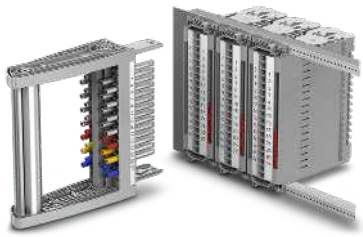
FAME 3	**FAME 3 SL**	**FAME 3 Rack**
N/C contact (normally closed)	N/C contact (normally closed)	N/C contact (normally closed)
Without operating plug	Without operating plug	Without operating plug
In the plug-in test socket	In the plug-in test socket	In the plug-in test socket
With separate plug-in test sockets	With separate plug-in test sockets	With configured plug-in test socket
-	-	With contact spring positions in the plug-in test socket
Ring cable lug connection	Ring cable lug connection	Ring cable lug connection with captive screw
Panel cutout	Panel cutout	Panel cutout or 19" rack
Standard plug or rotary handle plug with defined latching positions	Standard plug with compact plug with latching	Rotary handle plug with defined latching positions
Yes	No	No
Yes	No	Yes
4-20	4, 6	4-25
Yes	No	Yes

Comparison of plug-in test systems

Operating principle and normal operation

In contrast to the other plug-in test systems, the FAME 1 plug-in test system does not have an N/C contact (normally closed), but rather an N/O contact (normally open). This difference is decisive in normal operation.

N/O contact principle
During normal operation, the FAME 1 plug-in test system requires an operating plug. Plugging the operating plug in overrides the transformer short circuit. The measuring transducer is now operating safely.

N/C contact principle
The N/C contact function enables normal operation without an additional operating plug. If desired, the plug-in zone can be covered and sealed with a blind plug to prevent unauthorized access.
For increased safety, the FAME 3 RACK plug-in test system has blind plugs that, via an additional status contact, can indicate whether the respective blind plug is plugged.

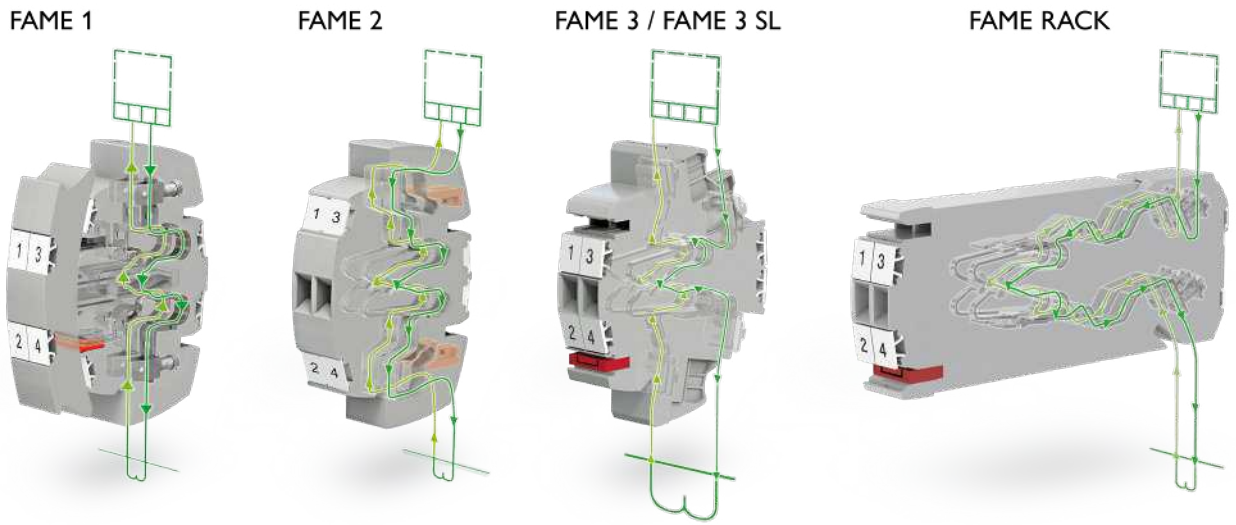

Comparison of plug-in test sockets of the plug-in test systems

Transformer short circuit

The FAME plug-in test systems can be quickly and easily short-circuited for performing a relay test or when replacing a protective device. To do so, the current transformer is short-circuited with the standard plug-in bridges in the plug-in test socket or in the test plug.
When the test plug is plugged into the plug-in test socket, an automatically leading transformer short-circuit is generated.

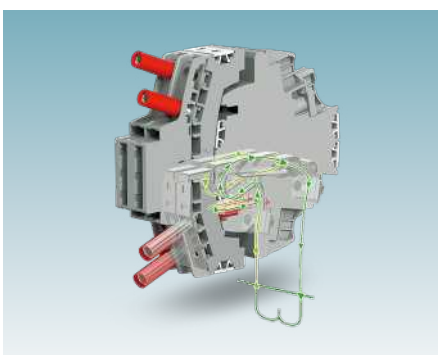

FAME 3 automatic leading transformer short circuit

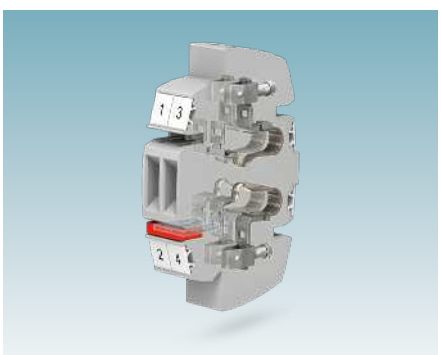

FAME 1 transformer short circuit

Comparison of plug-in test systems

Configurable switching points with time offset

The pluggable test systems use various approaches in order to perform different switching tasks in the correct switching sequence.

Separate plug-in test sockets
The FAME 1, FAME 3, and FAME 3 SL systems use separate plug-in test sockets for the various testing tasks. These pluggable test systems group the sequences of switching operations into different blocks, thus executing the forced switching sequence.

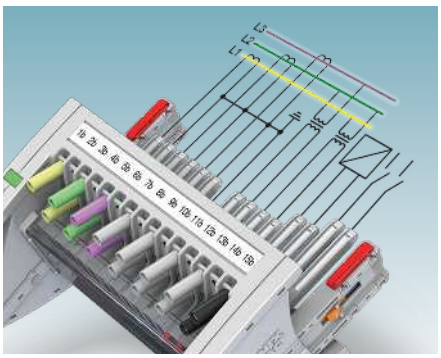

FAME 2 test plug

Configurable test plugs
In contrast to the systems described above, the FAME 2 plug-in test system uses a plug-in test socket that executes all functions in one block. Because a forced switching sequence is required here to perform the tests in a specific time sequence, the test plug has three different contact tab lengths. The time sequence can be determined with these contact lengths. When the test plug is plugged into the plug-in test socket, the long contacts in the plug-in test socket make contact first, then the medium contacts, and finally the short contacts. Thus, the switching sequence can be performed with a safe time separation in the same plugging process.

Configurable plug-in test socket
With the FAME 3 RACK plug-in test system, the forced switching sequence is executed in the plug-in test socket. To establish the switching sequence in the test socket, the plug-in test socket is assembled from modular individual plates with different switching points. The individual plates are available with an early, delayed, or late switching point. Depending on the selection of the plate, the contact is switched either earlier or later. When the test plug is plugged in, the switching sequence is thus executed as with the FAME 2 system. By configuring the switching points in the plug-in test socket, one test plug can be used for the entire system. This saves costs and simplifies the execution of the test.

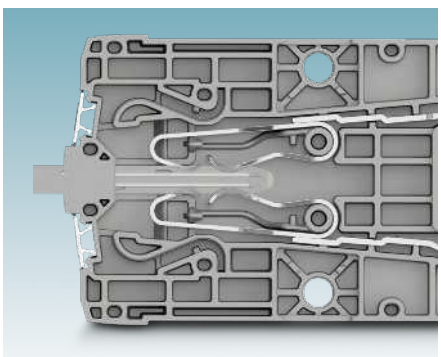

L-plate – early switching point

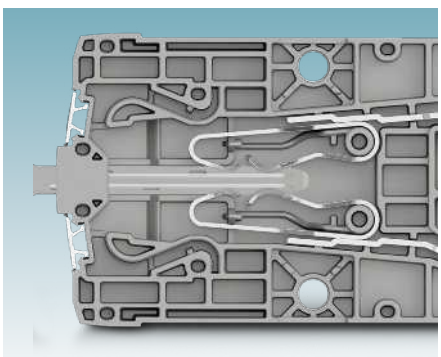

M-plate – delayed switching point

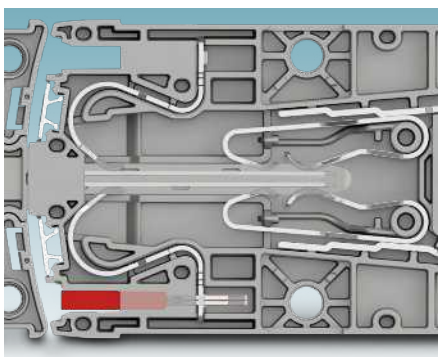

S-plate – late switching point

Comparison of plug-in test systems

Plug-in mechanism and compact plugs

FAME 1 standard test plug
The standard test plug can be plugged in directly. As soon as you have completed your tests, the test plug can simply be pulled out again without any special precautions.

Test plug with rotary handle with defined latching positions
The FAME 2, FAME 3, and FAME 3 RACK plug-in test systems feature the patented rotary handle mechanism. The mechanism helps you to pull the test plug out of the test block evenly. Due to the forced locking in the various switching positions, the plug-in test systems provide maximum safety for the system and the operator. As soon as you have completely inserted the test plug, the plug locks securely into the plug-in test socket. All test contacts are contacted in accordance with the test setup. You can unlock the test plug by turning the handle up to the stop. This means that the plug can be pulled out to the intermediate stage. The last disconnected contacts of the pluggable test system are reconnected to the safety equipment. The plug is unlocked only after the rotary handle springs back to its original position. Now you can pull the test plug out of the plug-in test system completely. The original signal connections are restored.

Locking mechanism of the FAME 3 SL plug-in test system
The test plug of the FAME 3 SL pluggable test system automatically locks into the plug-in test socket when plugged in. The test contacts are safely contacted in accordance with the test setup. As soon as the test is complete, you can release the lock by pressing the orange latching rockers. Unplugging the test plug will restore the plug-in test system's original signal connections.

Compact plugs
Due to their compactness, the compact plugs of the FAME 1 and FAME 3 plug-in test systems do not have the convenient handle on the test plugs. The compact versions can be plugged in directly and latch into the end position. To release the compact plugs, you have to press the orange latching buttons. While actuated, the plugs can be pulled out of the plug-in test socket effortlessly.

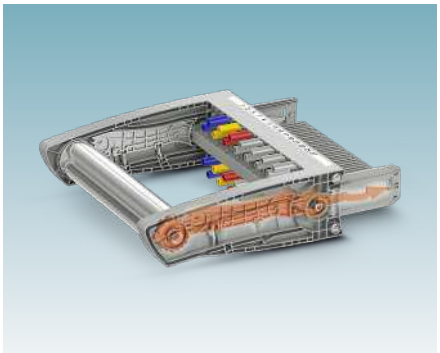

FAME 3 RACK rotary handle mechanism

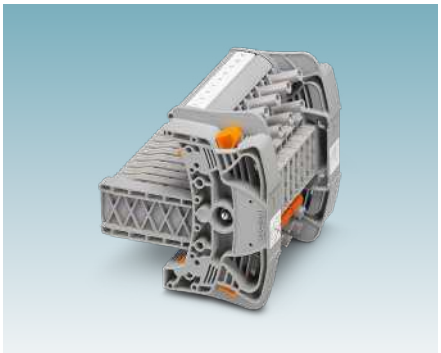

FAME 3 compact plug

Auxiliary contact for status detection

The FAME 1, 2, 3, and FAME 3 RACK systems can be assembled with additional auxiliary contacts. The contacts are integrated into special differently colored individual plates and thus enable the state to be indicated in SCADA applications. Depending on which FAME system you use, the switching state of the status contact changes when the cover is removed or a test plug is inserted.
The additional status contact of the FAME 1 plug-in test system functions as a changeover contact (CO). The system shows you whether a plug, such as the operating plug or test plug, for example, has been inserted. This can determine whether a test or normal operation is taking place in the control room.
The FAME 2, 3, and FAME 3 RACK systems have an auxiliary contact that operates in accordance with the N/C contact (normally closed) principle. These auxiliary contacts are connected by inserting a test plug, which enables the operating state to be requested. The FAME 3 RACK system includes covers with status contact. When the covers are removed, they break the contact.

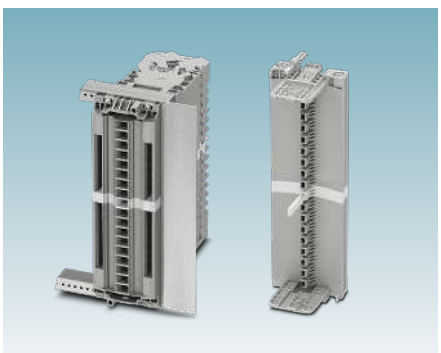

Plug-in test socket and blind plug with status contact

Online configurators

General information
Using the FAME online configurator, you can easily configure your individual solution via drag and drop with 3D visualization. The configurator guides you through the configuration process step by step, thus ensuring an error-free configuration. You can thus quickly and easily find your ideal solution online with products of the FAME modular system.

After completing the configuration, you are issued an individual solution ID. You can use this ID to call up, order, or modify your configuration at any time. You also have the option to view your configuration in a 3D viewer, download a corresponding data sheet, or skip straight to the shopping cart.

Free choice of end devices, browsers, and operating systems
The online configurators can be accessed worldwide via the respective local Phoenix Contact websites. Because the configurators are online-based and embedded in the website, they can be accessed from any end device without restrictions. It does not matter whether you use a computer, notebook, tablet, or smartphone. Furthermore, the configurators can be used with any operating system. The configurator runs flawlessly, whether on Windows, Linux, MacOS, iOS, or Android systems. The various browsers, such as Microsoft Edge, Mozilla Firefox, Google Chrome and Apple Safari, are also compatible without exception. The configurator is available in different languages to meet local needs.

FAME 3 RACK configurator

Your advantages

- ☑ Intuitive step-by-step operation with preconfigured modules and options
- ☑ Predefined identification options for marking the positions
- ☑ Real-time 3D visualization within the online configurator
- ☑ Real-time correction – errors in the configuration are corrected based on a set of rules
- ☑ Easy download of 3D files in various file formats
- ☑ Easy saving, loading, and adjusting of the finished configuration, possible at any time with the individual solution ID

FAME 1 – plug-in test system with operating plug

FAME 1 combines complex switching operations for function tests of current transformers and voltage transformers, as well as tripping and signal contacts in separate compact and space-saving blocks. The system operates in accordance with the N/O contact principle. An operating plug is required in normal operation. The automatic transformer short-circuit function is ensured with plug-in bridges in the plug-in test socket.

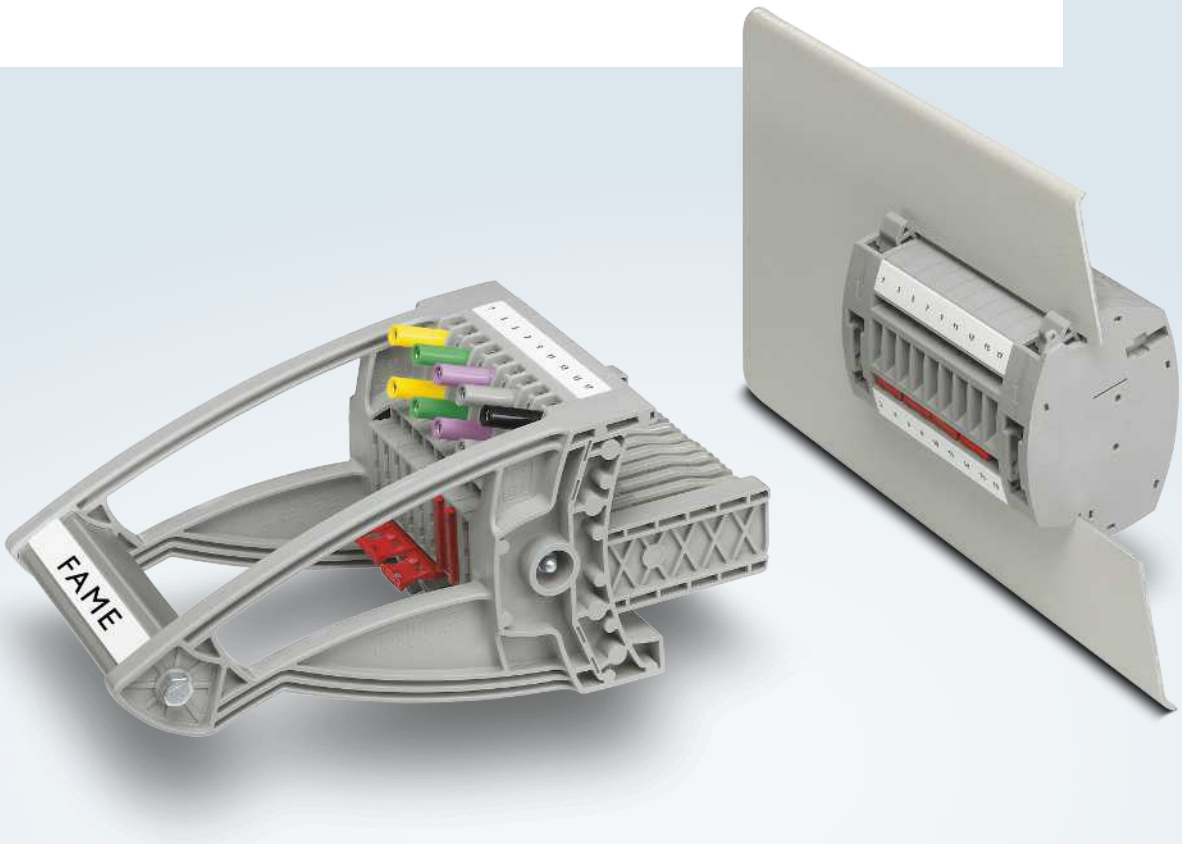

Your advantages

- ☑ Maximum safety with leading and automatic transformer short circuit
- ☑ Complies with all East European requirements on plug-in test systems with operating plug
- ☑ Safe with latching, sealing option, and two-hand operation of the operating plug

FAME 1 circuit example

Mains protection – circuit example with sequential switching sequence

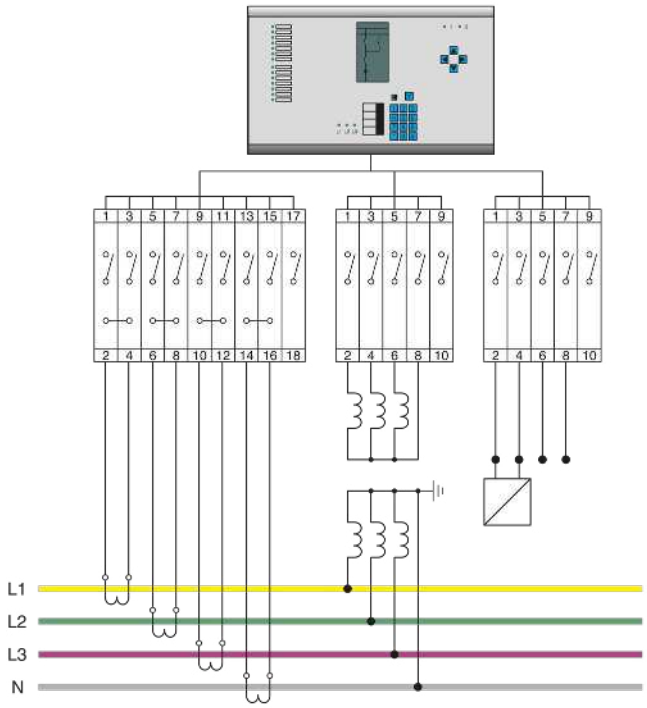

Plug-in test socket for current transformers

Plug-in test socket, operating plug, test plug

Type	Item no.	Required quantity
UTWE 6/8+1	3069064	1
FWP 8+1	3069297	1
FTP 8+1	3069242	1
Plug-in bridge		
FBS 2-8	3030284	4

Plug-in test socket for voltage transformers

Plug-in test socket, operating plug, test plug

Type	Item no.	Required quantity
UTWE 6/4+1	3069048	1
FWP 4+1	3069271	1
FTP 4+1	3069223	1

Plug-in test socket for signal and tripping contacts

Plug-in test socket, operating plug, test plug

Type	Item no.	Required quantity
UTWE 6/4+1	3069048	1
FWP 4+1	3069271	1
FTP 4+1	3069223	1

FAME 1 product features

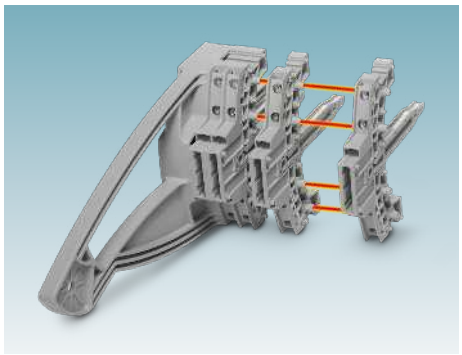

The compact and modular design of the system provides an extensive range of options for every application with numbers of positions from 4 to 13. This applies to both the plugs and the plug-in test sockets.

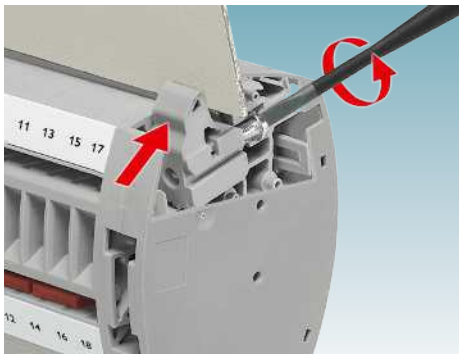

The patented panel fastening is easy to use and has a robust design. Large tolerances in the sheet metal cutout of up to 4 mm are compensated for by the eccentric tappet function.

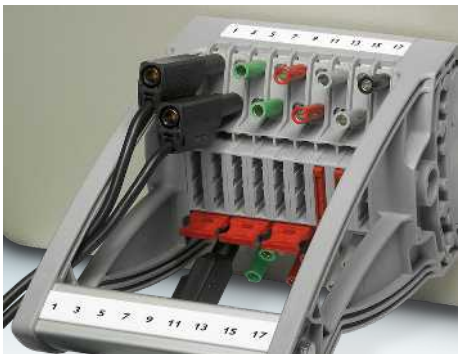

Thanks to the optional use of jumpers, all test circuits can be implemented in the plug. Staggered test sockets enable the use of safety test leads in a confined space.

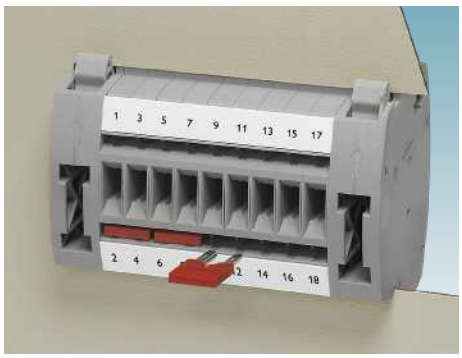

The transducer block offers two function shafts for short-circuit bridging configuration on the control cabinet exterior.

In addition to the two marking grooves, the plug-in test sockets for panel mounting also provide two function shafts inside the control cabinet for forming and grounding the star point.

It takes two hands to release the robust latching of the operating plug.

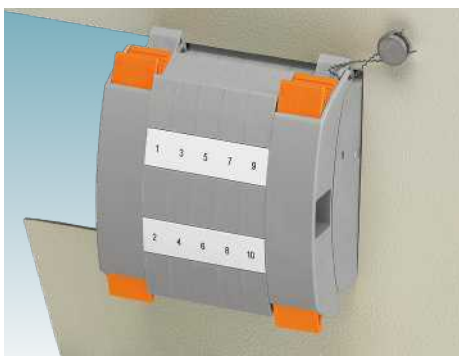

The operating plug is protected against unauthorized actuation thanks to the optional seal. The operating plug safely covers the short-circuit bridges and plug openings in normal operation.

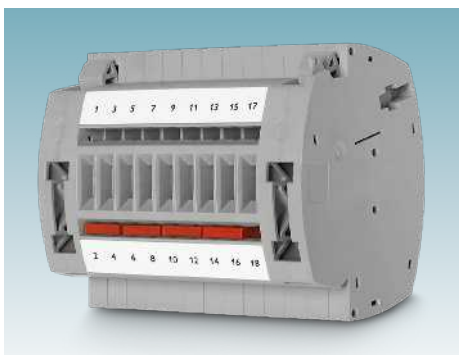

Large-surface labeling options on the inside and outside of the control cabinet enable the clear identification of each terminal point.

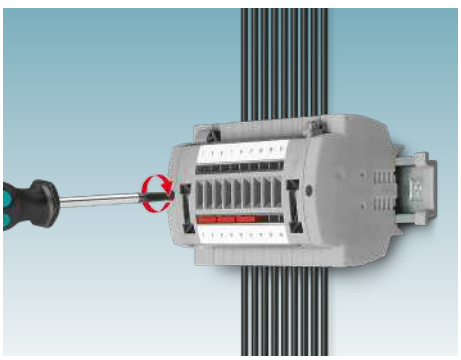

The pre-assembled test terminal strips can be mounted in a space-saving way in the control cabinet by simply snapping the E-UTWE 6 adapter onto standard NS 35 DIN rails.

FAME 1 additional information

Operating state

The switch contact in the plug-in test socket is an N/O contact. In normal operation, the operating plug closes the contact.

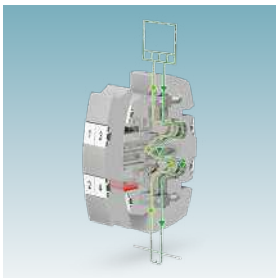

Normal operation
When the power plug is used, the transformer short circuit is automatically overridden and the measuring transducer operates safely.

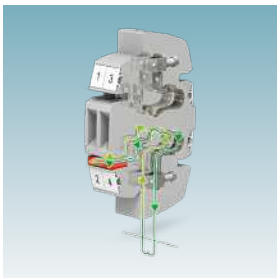

Transformer short circuit
If short-circuit bridges are plugged in, the auxiliary contact generates a leading short circuit when the plug is removed. Connected measuring transducers are protected against damage.

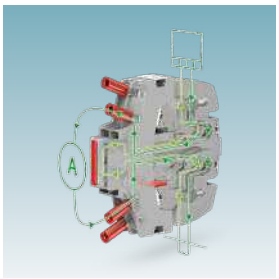

Test operation
When plugging, the connected ammeter is first of all looped into the circuit. Then the transformer short circuit is automatically overridden.

N/O contact operating principle

In contrast to the other plug-in test systems, the FAME 1 plug-in test system operates in accordance with the N/O (normally open) contact principle.
As a result, normal operation can only take place with an operating plug. It must induced consciously. To protect the operating plug against unauthorized or unintentional operation, the plugs of the FAME 1 system can be sealed.

In addition to conscious actuation, the operating plug also supports safety.
In normal operation, the plug covers the short-circuit bridges and plug openings securely against tampering and contamination.
Furthermore, the N/O contact operating principle gives the user clear status detection via the operating plug.

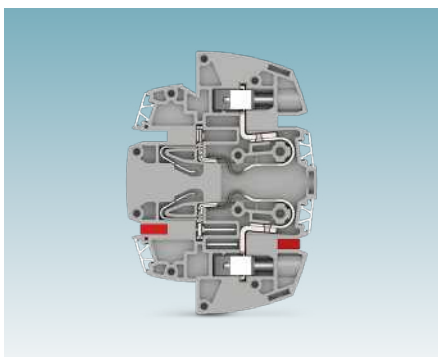

FAME 1 plug-in test socket

Auxiliary contact operating principle

The FAME 1 system establishes the auxiliary contact in the AUX version with two microswitches. The contact is integrated into a special different colored single plate and enables remote status control via SCADA.
These additional auxiliary contacts function in accordance with the changeover contact principle (C/O). The system shows you whether a plug, such as the operating plug or test plug, is in use. This enables remote verification of whether the system is in test operation or normal operation. Furthermore, unauthorized tampering can thus be determined.

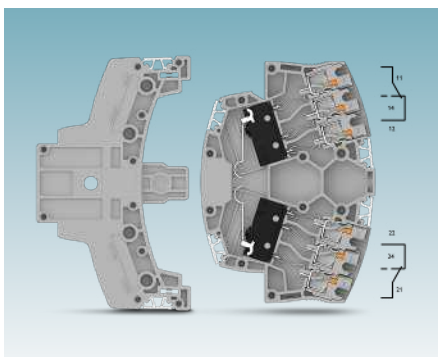

Plug-in test socket with status indicator

FAME 1 product overview

Plug-in test sockets without status contact

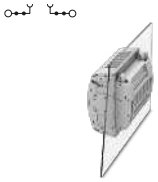

Type	Item no.	UTWE 6/6+1	3069051
Mounting type		Panel mounting	
Connection method		Screw connection	
Number of positions		7	
Cross-section range mm² / AWG		0.2 mm² … 10 mm² / 24 … 8	
Current / voltage		24 A / 400 V	
Available numbers of positions		4 … 13	

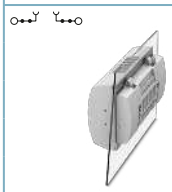

Type	Item no.	UTWE 6/6+1 BI	3069996
Mounting type		Panel mounting	
Connection method		Screw connection	
Number of positions		7	
Cross-section range mm² / AWG		0.2 mm² … 10 mm² / 24 … 8	
Current / voltage		24 A / 400 V	
Available numbers of positions		5, 7	

Operating plug without status contact

Type	Item no.	FWP 6+1	3069284
Mounting type		–	
Connection method		–	
Number of positions		7	
Cross-section range mm² / AWG		–	
Current / voltage		24 A / 400 V	
Available numbers of positions		4 … 13	

Test plug

Type	Item no.	FTP 6+1	3069239
Plug type		Standard plug	
Connection method		Cable lug connection	
Number of positions		7	
Cross-section range mm² / AWG		0.5 mm² … 2.5 mm² / 20 … 14	
Current / voltage		24 A / 400 V	
Available numbers of positions		4 … 13	

Compact test plug

Type	Item no.	FTPC 6+1	3069262
Plug type		Compact plug with latching	
Connection method		Cable lug connection	
Number of positions		7	
Cross-section range mm² / AWG		0.5 mm² … 2.5 mm² / 20 … 14	
Current / voltage		24 A / 400 V	
Available numbers of positions		4 … 13	

FAME 1 product overview

Blind plug

COMPLETE line

Type	Item no.	FBP 6+1	3069406
Mounting type		–	
Connection method		–	
Number of positions		7	
Cross-section range mm² / AWG		–	
Current / voltage		–	
Available numbers of positions		4 … 13	

FAME 2 – plug-in test system

FAME 2, the plug-in test system without operating plug, combines complex switching operations for function tests of current transformers and voltage transformers, as well as tripping and signal contacts, in just one compact and space-saving block. The system operates in accordance with the N/C contact principle. Plug-in bridges in the test plug ensure an automatic transducer short circuit function.

Your advantages

- ☑ Easy testing with forced switching sequence in just one block
- ☑ Safe due to guided operation with patented rotary handle
- ☑ Flexible due to the free choice of connection technology
- ☑ Safe assignment with coding option

FAME 2 circuit example

Mains protection – circuit example with star-point grounding in the plug-in test socket

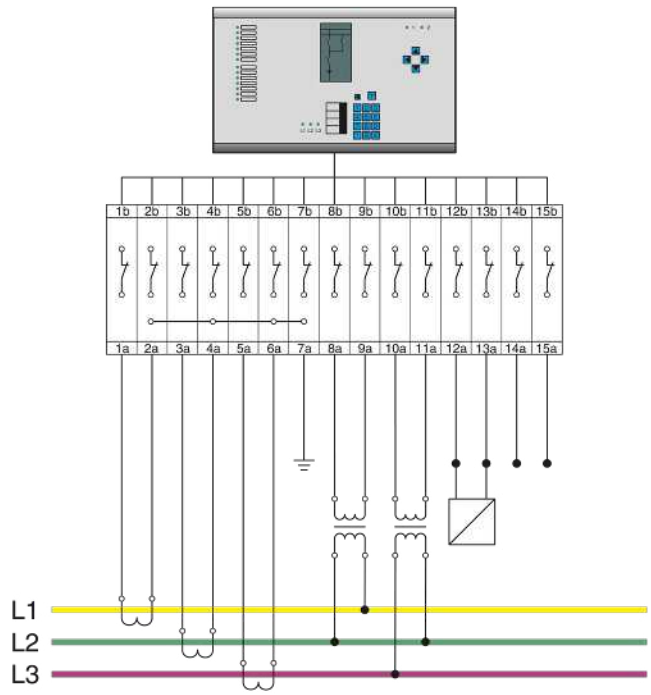

Plug-in test socket for DIN rail mounting with current transformer, voltage transformer, and signals

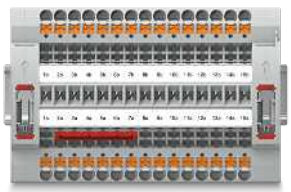

Plug-in test socket, blind plug

Type	Item no.	Required quantity
PTRE 6-2/15	3069864	1
FBP 2/15	3069886	1
Plug-in bridge		
FBS 6-8	3032470	1

Test plugs with current transformer, voltage transformer, and signals

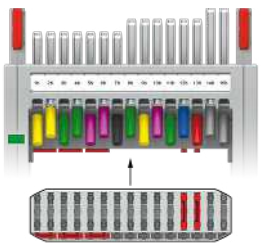

Test plug

Type	Item no.	Required quantity
FTPR 2/15	3001693	1
Plug-in bridge		
FBS 2-8	3030284	3
FBS 1/3-8	3032363	2

FAME 2 product features

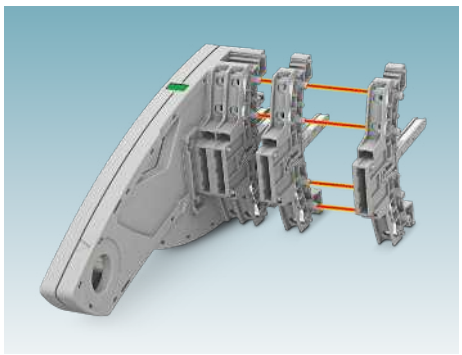

The compact and modular design of the system provides an extensive range of options for every application with numbers of positions from 4 to 25. This applies to both the plugs and the plug-in test sockets.

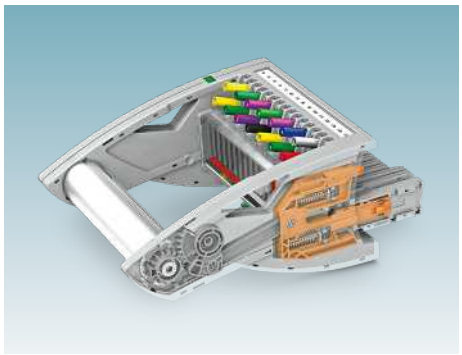

Programmed short-circuit and switching operations depend on consistent insertion and removal of the test plug. Undefined contact states are effectively avoided with the rotary handle mechanism.

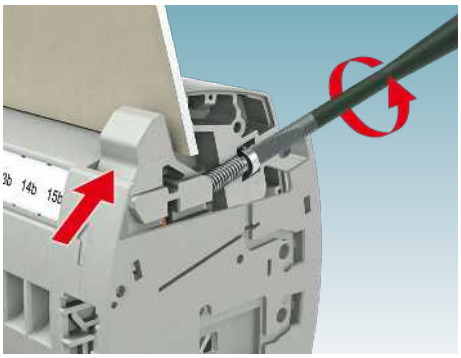

The patented panel fastening is easy to use and has a robust design. Large tolerances in the sheet metal cutout of up to 4 mm are compensated for by the eccentric tappet function.

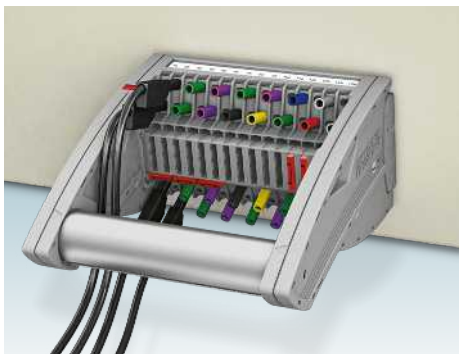

The offset test socket arrangement enables the use of CAT III and CAT IV/600 V safety test leads according to EN 61010-031 in a confined space.

FAME plug-in test sockets are designed in accordance with IP20. Blind plugs without switching function can be inserted and secured with seals. These can only be released with two-hand operation.

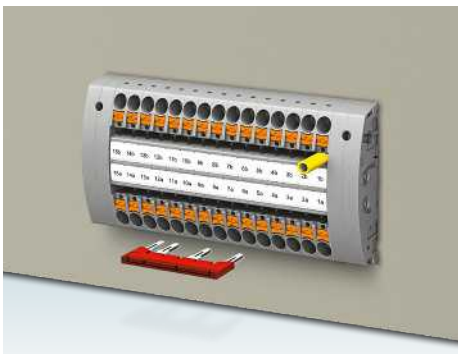

The plug-in test sockets for panel mounting also offer two function shafts, or six function shafts in the case of the DIN rail version, inside the control cabinet for forming and grounding the star point.

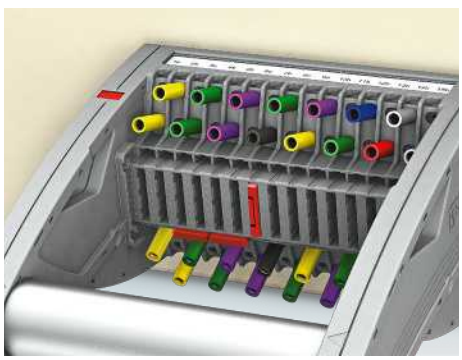

The test plug features three function shafts. Horizontally aligned as a leading short-circuit bridge, vertically aligned as a feed-through connection during testing.

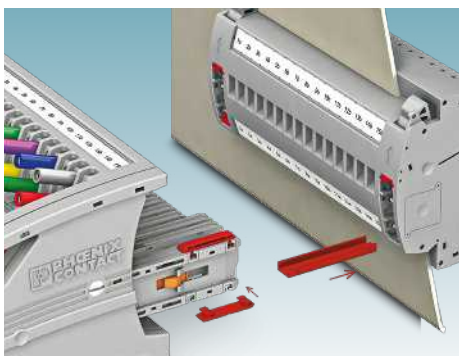

The coding profiles are assigned by the user depending their application. VDE-compliant versions are pre-coded on delivery. This ensures maximum safety.

All applications that do not involve testing through the closed door, and the open rack mounting, can be implemented with the DIN rail version. Terminal points and plug-in zone can be operated from one direction.

FAME 2 additional information

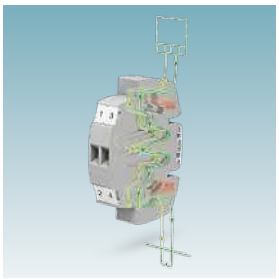

Normal operation
Additional operating plugs are not required for normal operation; the measuring transducer operates safely and reliably. If desired, the plug-in zone can be covered and sealed with a blind plug to prevent unauthorized access.

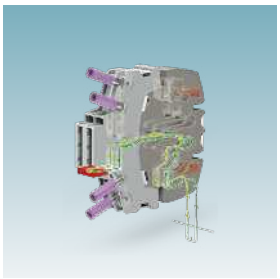

Transformer short circuit
When the test plug is inserted, the transducer is short-circuited upstream. Connected measuring transducers are safely protected against damage.

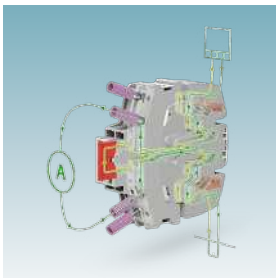

Test operation
With the bridge inserted lengthwise in the test plug, test equipment can be looped into the current path via the 4 mm test sockets.

Special feature: configurable switching points

The FAME 2 system combines various switching operations in one block. To do this, the possible switching points can be configured by different contact tab lengths in the test plug.
Configuration is quick and easy with the online configurator. To simplify the configuration as much as possible, a defined view of where counting is performed is necessary for a correct order. This is achieved when the status window is visible on the left-hand side in the top view.
The status viewing window is the green rectangular rectangle in the adjacent figure.

Position 1 is then on the left.
Each position of a test plug is described by a contact tab feature that is to be selected.
The following features are possible:

- S short contact tab, gray
- M medium contact tab, gray
- L long contact tab, gray
- LGN long contact tab, green
- N no contact tab, gray

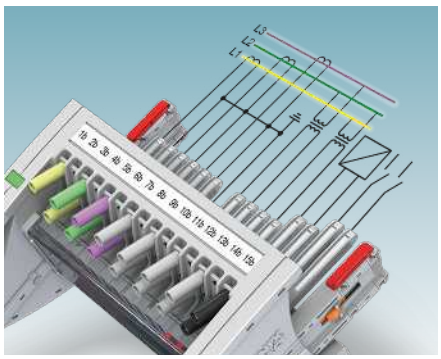

Status indicator

VDE

The FAME 2 plug-in test system is the only system that has corresponding pre-assembled VDE versions in accordance with the technical specification “plug-in test systems for safety equipment”.
In line with the VDE specification, you will receive pre-assembled and coded test plugs with the corresponding plug-in test sockets for various switching tasks.

FAME 2 product overview

Plug-in test sockets

	Type	Item no.	UTWE 6-2/7 3069654
	Mounting type		Panel mounting
	Connection method		Screw connection
	Number of positions		7
	Cross-section range mm² / AWG		0.2 mm² … 10 mm² / 24 … 8
	Current / voltage		24 A / 400 V
COMPLETE line	Available numbers of positions		4 … 25
	Type	Item no.	PTWE 6-2/7 3069830
	Mounting type		Panel mounting
	Connection method		Push-in connection
	Number of positions		7
	Cross-section range mm² / AWG		0.5 mm² … 6 mm² / 20 … 10
	Current / voltage		24 A / 400 V
COMPLETE line	Available numbers of positions		4 … 25
	Type	Item no.	UTRE 6-2/7 3069808
	Mounting type		DIN rail mounting
	Connection method		Screw connection
	Number of positions		7
	Cross-section range mm² / AWG		0.2 mm² … 10 mm² / 24 … 8
	Current / voltage		24 A / 400 V
COMPLETE line	Available numbers of positions		4 … 25
	Type	Item no.	PTRE 6-2/7 3069852
	Mounting type		DIN rail mounting
	Connection method		Push-in connection
	Number of positions		7
	Cross-section range mm² / AWG		0.5 mm² … 6 mm² / 20 … 10
	Current / voltage		24 A / 400 V
COMPLETE line	Available numbers of positions		4 … 25

Important note

The technical data in the product tables relates to the specified reference item. It may differ slightly for connection versions in some cases.

You will find the exact and complete data for the individual items in our online shop. There is also a list of corresponding accessories provided for each item.

FAME 2 product overview

Test plug

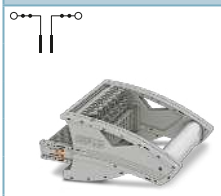

Type	Item no.	FTPR-2/7 3001685
Plug type		Rotary handle plug with defined latching positions
Connection method		Cable lug connection
Number of positions		7
Cross-section range mm² / AWG		0.5 mm² … 2.5 mm² / 20 … 14
Current / voltage		24 A / 400 V
Available numbers of positions		4 … 25

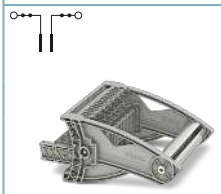

Type	Item no.	FTP-2/7 3001709
Plug type		Standard plug
Connection method		Cable lug connection
Number of positions		7
Cross-section range mm² / AWG		0.5 mm² … 2.5 mm² / 20 … 14
Current / voltage		24 A / 400 V
Available numbers of positions		4 … 25

Blind plug

Type	Item no.	FBP-2/7 3069878
Mounting type		–
Connection method		–
Number of positions		7
Cross-section range mm² / AWG		–
Current / voltage		–
Available numbers of positions		4 … 25

FAME 2 product overview

Plug-in test sockets with VDE coding

	Type	Item no.	UTWE 6-2/A7 3069410
	Mounting type		Panel mounting
	Connection method		Screw connection
	Number of positions		A7
	Cross-section range mm² / AWG		0.2 mm² … 10 mm² / 24 … 8
	Current / voltage		24 A / 400 V
COMPLETE line	Available numbers of positions		B7, E7, A14, B14, C14, B19, C19, D19, F19, G19, H19, I19
	Type	Item no.	PTWE 6-2/A7 3069436
	Mounting type		Panel mounting
	Connection method		Push-in connection
	Number of positions		A7
	Cross-section range mm² / AWG		0.5 mm² … 6 mm² / 20 … 10
	Current / voltage		24 A / 400 V
COMPLETE line	Available numbers of positions		B7, E7, A14, B14, C14, B19, C19, D19, F19, G19, H19, I19
	Type	Item no.	UTRE 6-2/A7 3069423
	Mounting type		DIN rail mounting
	Connection method		Screw connection
	Number of positions		A7
	Cross-section range mm² / AWG		0.2 mm² … 10 mm² / 24 … 8
	Current / voltage		24 A / 400 V
COMPLETE line	Available numbers of positions		B7, E7, A14, B14, C14, B19, C19, D19, F19, G19, H19, I19
	Type	Item no.	PTRE 6-2/A7 3069449
	Mounting type		DIN rail mounting
	Connection method		Push-in connection
	Number of positions		A7
	Cross-section range mm² / AWG		0.5 mm² … 6 mm² / 20 … 10
	Current / voltage		24 A / 400 V
COMPLETE line	Available numbers of positions		B7, E7, A14, B14, C14, B19, C19, D19, F19, G19, H19, I19

FAME 2 product overview

Test plugs with VDE coding

Type	Item no.	FTPR-2/A7 3069484
Plug type		Rotary handle plug with defined latching positions
Connection method		Cable lug connection
Number of positions		A7
Cross-section range mm² / AWG		0.5 mm² … 2.5 mm² / 20 … 14
Current / voltage		24 A / 400 V
Available numbers of positions		B7, E7, A14, B14, C14, B19, C19, D19, F19, G19, H19, I19

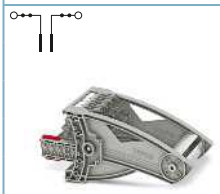

Type	Item no.	FTP-2/A7 3069470
Plug type		Standard plug
Connection method		Screw connection
Number of positions		A7
Cross-section range mm² / AWG		0.5 mm² … 2.5 mm² / 20 … 14
Current / voltage		24 A / 400 V
Available numbers of positions		B7, E7, A14, B14, C14, B19, C19, D19, F19, G19, H19, I19

Blind plug with VDE coding

Type	Item no.	FBP-2/A7 3069497
Mounting type		Insertion in the header
Connection method		–
Number of positions		A7
Cross-section range mm² / AWG		–
Current / voltage		–
Available numbers of positions		B7, E7, A14, B14, C14, B19, C19, D19, F19, G19, H19, I19

FAME 3 – plug-in test system

FAME 3, the plug-in test system without operating plug, combines complex switching operations for function tests of current transformers and voltage transformers, as well as tripping and signal contacts, in just one compact and space-saving block. The system operates in accordance with the N/C contact principle. The automatic transformer short-circuit function is ensured with plug-in bridges in the plug-in test socket.

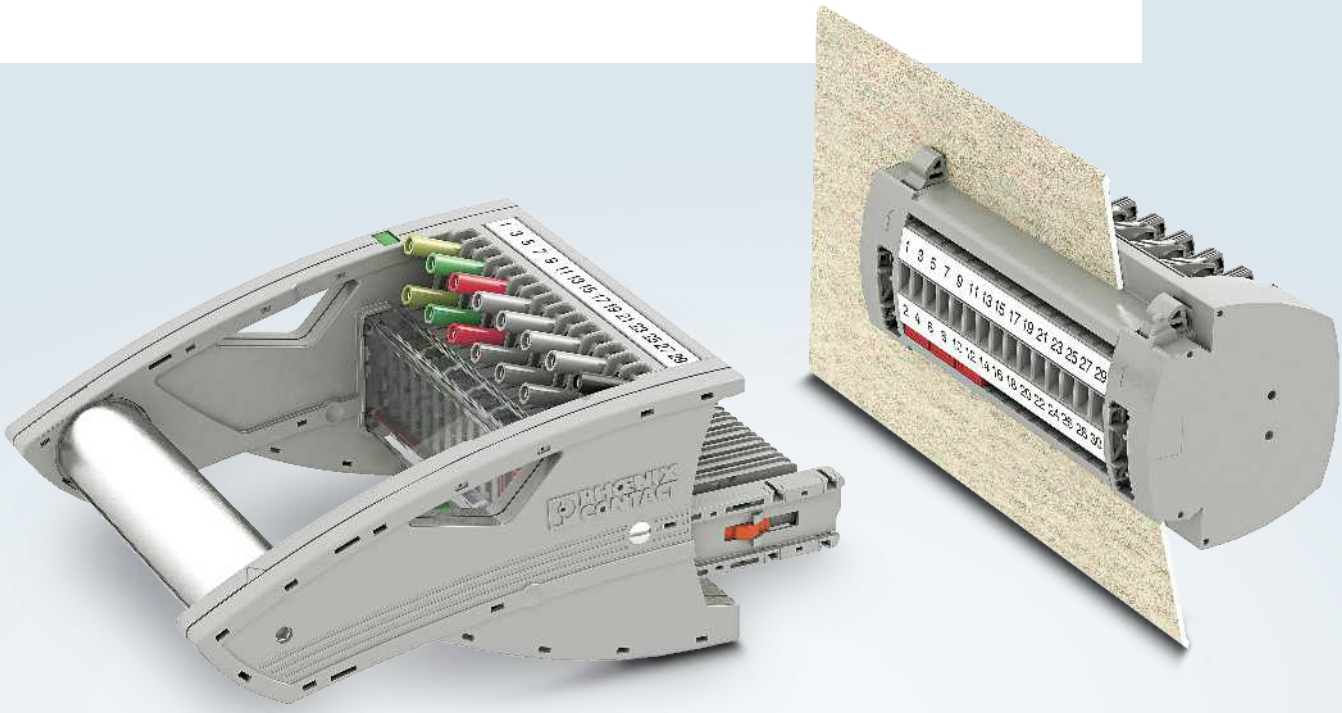

Your advantages

- Maximum safety with leading and automatic transformer short circuit
- Configurable short-circuit bridging in the plug-in test socket
- Compact screw connection for ring and fork-type cable lugs with 8.2 mm pitch

FAME 3 circuit example

Mains protection – circuit example with star-point grounding

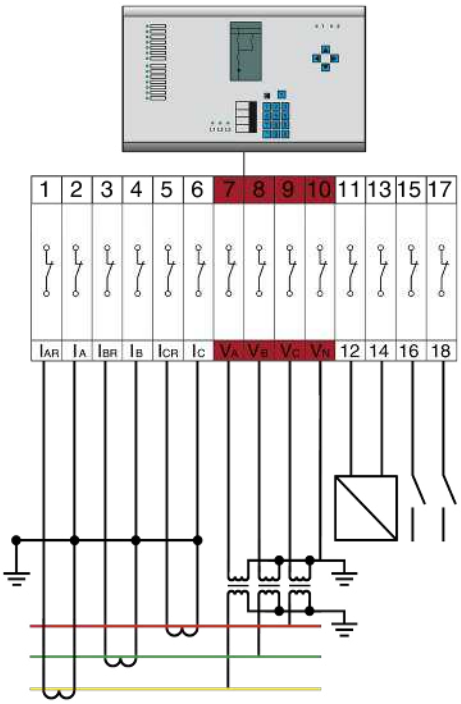

Plug-in test socket for DIN rail mounting with current transformer, voltage transformer, and signals

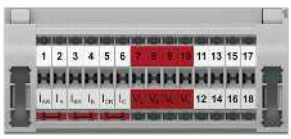

Plug-in test socket, blind plug

Type	Item no.	
RSCWE 6-3/14	3969928	
FBP-2/14	3069885	
Plug-in bridge		
FBS 2-8	3030284	

Test plugs with current transformer, voltage transformer, and signals

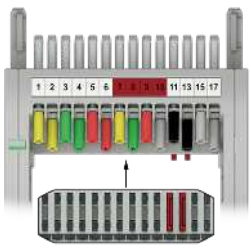

Test plug

Type	Item no.	Required quantity
FTPR 3/14S	3069957	1
Plug-in bridge		
FBS 3-8	3030297	1

FAME 3 product features

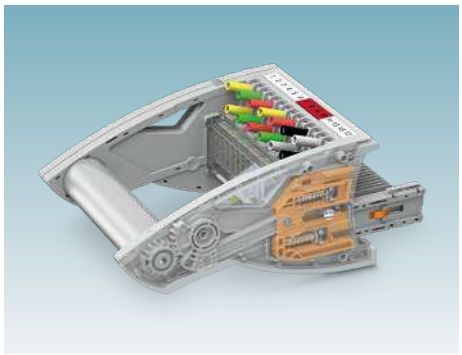

Defined, mechanically supported removal of the patented test plug from the test block. Optical display and forced locking in the various switch positions.

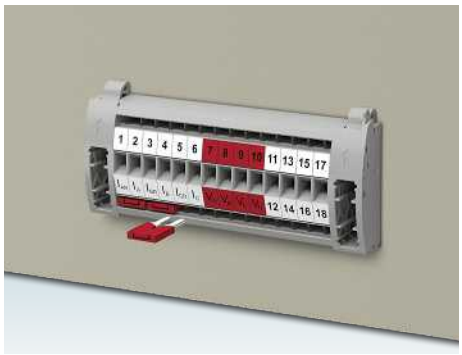

Automatic, leading transformer short circuit implemented with standard plug-in bridges in the plug-in test socket. Their positioning of the short-circuit bridges on the outside of the control cabinet is clearly visible.

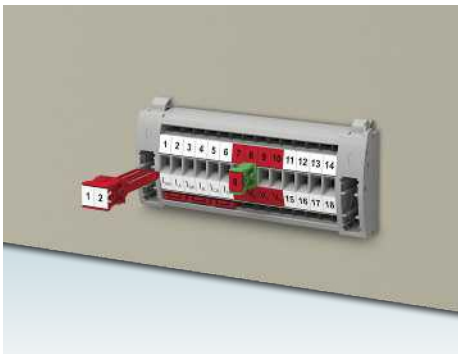

Service connectors are available with varying numbers of positions for special switching operations. A sealable, transparent cover protects against unauthorized actuation.

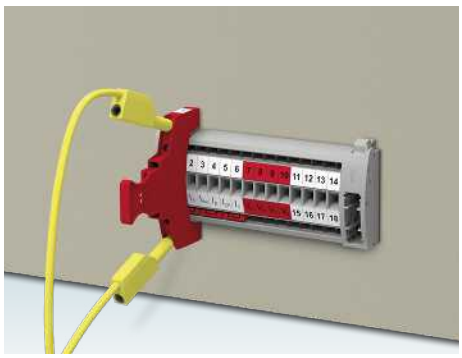

For special test processes you will receive service connectors with 4 mm test sockets with various numbers of positions. The test sockets can be used to connect measuring equipment with safety test cables, for example.

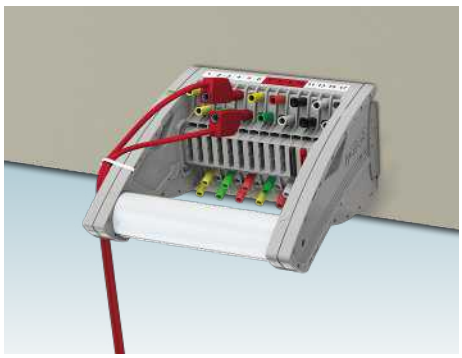

Space saving with offset test socket arrangement. The test cables can be easily fixed in place with cable ties.

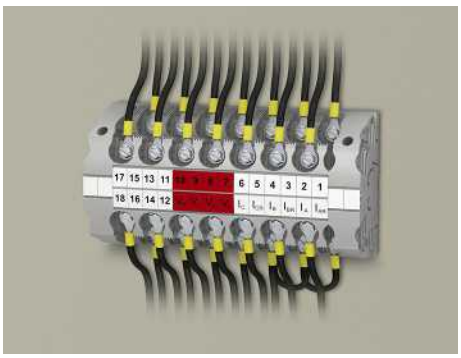

The plug-in test sockets feature screw connection technology for ring and fork-type cable lugs.

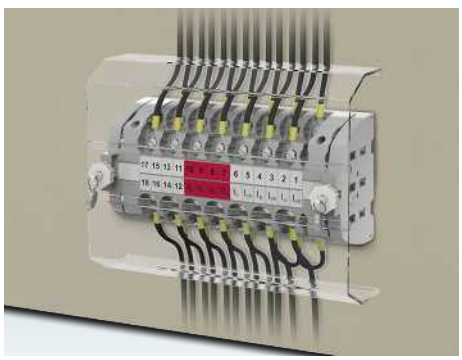

The plug-in test socket can be optionally protected against unauthorized actuation inside the control cabinet by means of a sealable cover.

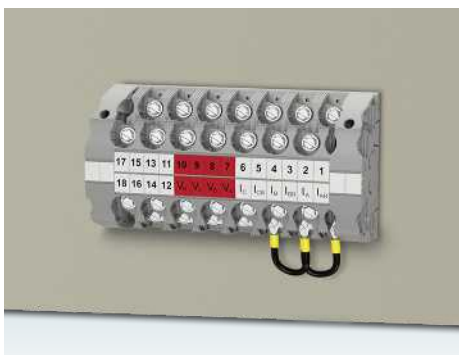

Star-point bridging is easily implemented with wire bridges on the inside of the control cabinet.

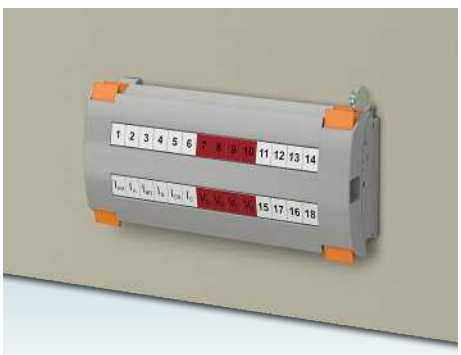

The robust latching of the cover for the plug-in test sockets can only be released with two-hand operation. The optional seal protects against unauthorized actuation.

FAME 3 additional information

Operating state

The switching contact in the plug-in test socket is an N/C contact. In normal operation, the contact is closed.

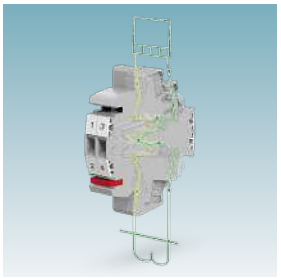

Normal operation
The N/C contact function enables normal operation without an additional operating plug. If desired, the plug-in zone can be covered and sealed with a blind plug to prevent unauthorized access.

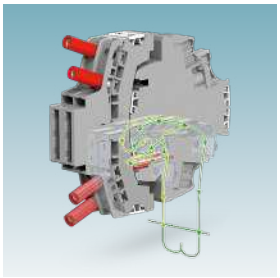

Transformer short circuit
When replacing the protective device or testing relays, the current transformer is short circuited upstream with plug-in bridges. The short circuit occurs automatically when the test plug is inserted.

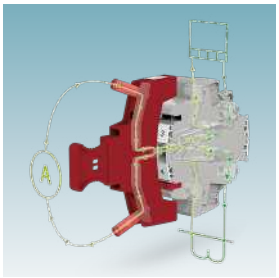

Test operation
If you use the single-position service plug, you can simply loop the test equipment into the current path via the 4 mm test sockets.

Auxiliary contact for status detection

The FAME 3 system establishes the auxiliary contact in the same way as the FAME 2 system in the AUX version via differently colored individual plates. The auxiliary contact also enables you to control the status remotely via SCADA. The additional auxiliary contact of the FAME 3 plug-in test system functions in accordance with the N/C (normally open) contact principle. This shows you whether a test plug is plugged in or whether the system is in normal operation. This enables remote verification of whether the system is in test operation or normal operation. Furthermore, unauthorized tampering can thus be determined.

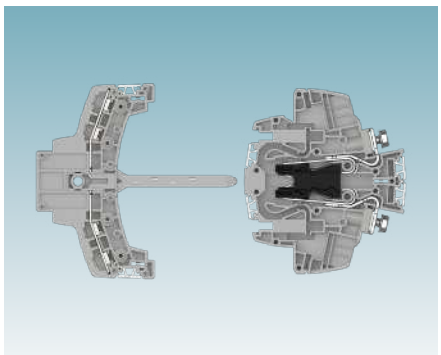

FAME 3 auxiliary contact for status recognition

FAME 3 product overview

Plug-in test sockets

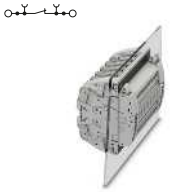

Type	Item no.	RSCWE 6-3/10 3969926
Mounting type		Panel mounting
Connection method		Ring cable lug
Number of positions		10
Cross-section range mm² / AWG		0.5 mm² … 10 mm² / 24 … 8
Current / voltage		24 A / 400 V
Available numbers of positions		2 … 25

Important note

The technical data in the product tables relates to the specified reference item. It may differ slightly for connection versions in some cases.

You will find the exact and complete data for the individual items in our online shop. There is also a list of corresponding accessories provided for each item.

FAME 3 product overview

Test plug

Type	Item no.	
Type	Item no.	FTPR-3/10S 3069955
Plug type		Rotary handle plug with defined latching positions
Connection method		Cable lug connection
Number of positions		10
Cross-section range mm² / AWG		0.5 mm² … 2.5 mm² / 20 … 14
Current / voltage		20 A / 400 V
Available numbers of positions		4 … 20

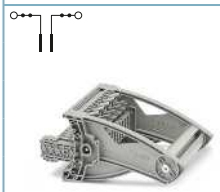

Type	Item no.	
Type	Item no.	FTP-3/10S 3069951
Plug type		Standard plug
Connection method		Cable lug connection
Number of positions		10
Cross-section range mm² / AWG		0.5 mm² … 2.5 mm² / 20 … 14
Current / voltage		20 A / 400 V
Available numbers of positions		4 … 20

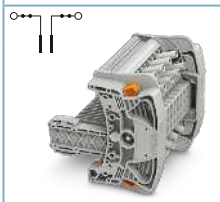

Type	Item no.	
Type	Item no.	FTPC-3/10S 3069931
Plug type		Compact plug with latching
Connection method		Cable lug connection
Number of positions		10
Cross-section range mm² / AWG		0.5 mm² … 2.5 mm² / 20 … 14
Current / voltage		20 A / 400 V
Available numbers of positions		4 … 14

Blind plug

Type	Item no.	
Type	Item no.	FBP-2/10 3069881
Mounting type		Insertion in the header
Connection method		–
Number of positions		10
Cross-section range mm² / AWG		–
Current / voltage		–
Available numbers of positions		4 … 25

FAME plug-in test systems

FAME 3 SL compact plug-in test system

FAME 3 SL combines complex switching operations for function tests of current transformers and voltage transformers, as well as tripping and signal contacts, in separate space-saving blocks available in various colors. The system operates in accordance with the N/C contact principle. An operating plug is not required.

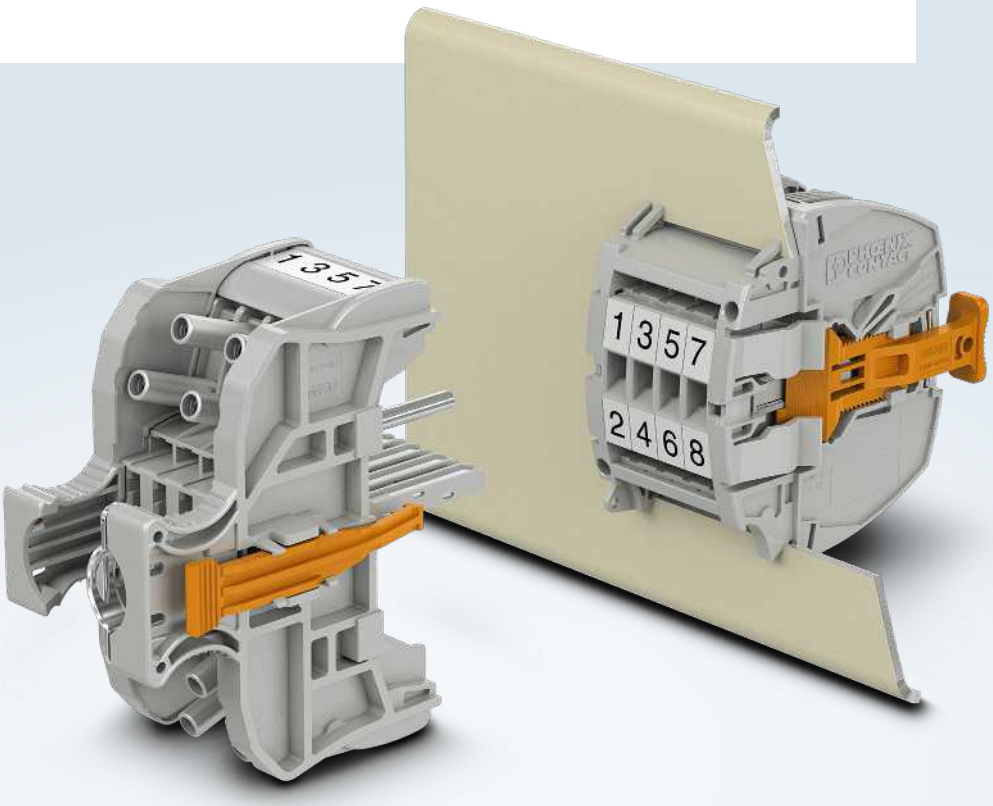

Your advantages

- Compact plug-in test socket with test plug for space-saving panel mounting
- Reliable test procedure with coded and latching plug design
- Fast function assignment with color identification

FAME 3 SL circuit example

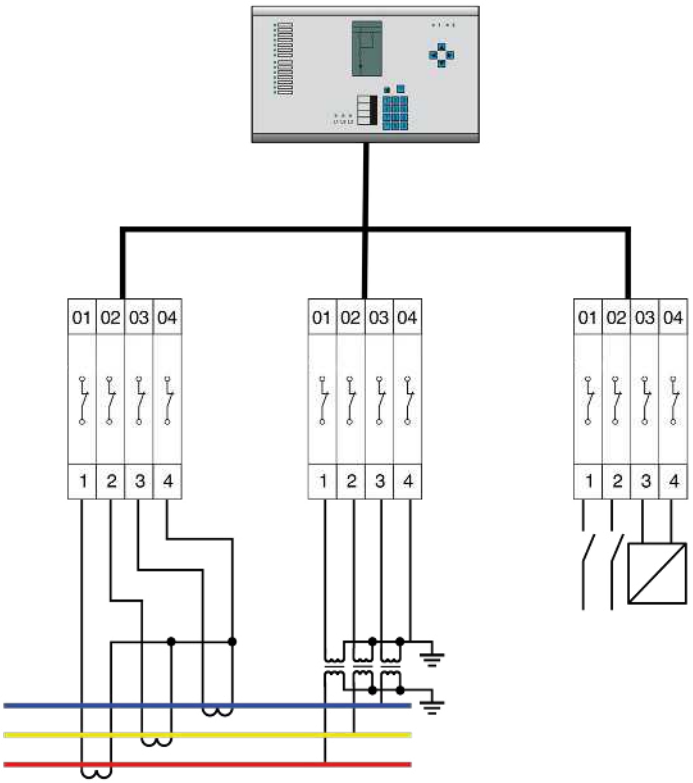

Plug-in test socket for current transformers

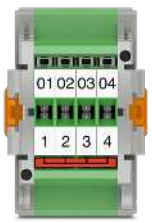

Plug-in test socket, operating plug, test plug

Type	Item no.	Required quantity
RSCWE 6-3/4SL GN	1029997	1
FTP3-4SL	1030003	1
FBP-3/4SL	1030010	1
Plug-in bridge		
FBS 4-8	3030307	4

Plug-in test socket for voltage transformers

Plug-in test socket, operating plug, test plug

Type	Item no.	Required quantity
RSCWE 6-3/4SL	1029994	1
FTP3-4SL	1030004	1
FBP-3/4SL	1030010	1

Plug-in test socket for signal and tripping contacts

Plug-in test socket, operating plug, test plug

Type	Item no.	Required quantity
RSCWE 6-3/4SL	1029994	1
FTP3-4SL	1030004	1
FBP-3/4SL	1030010	1

FAME 3 SL product features

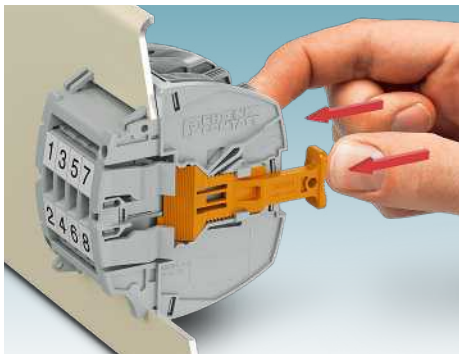

The plug-in test socket positioned in the cutout is fixed in place without screws by pressing on the two orange actuating elements.

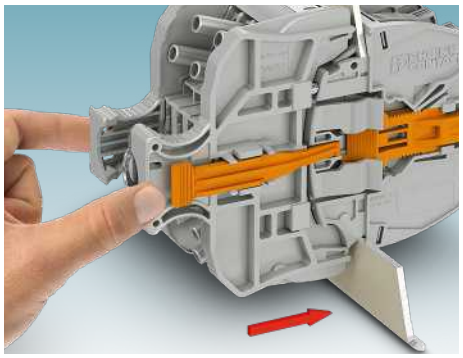

By plugging in and latching the test plug, all test contacts are securely contacted in accordance with the test setup.

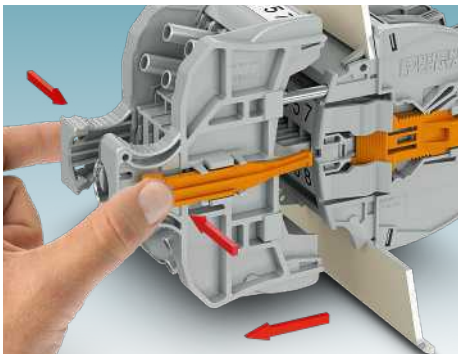

The latching is released by actuating the orange latching rockers. Unplugging the test plug will restore the original signal connections.

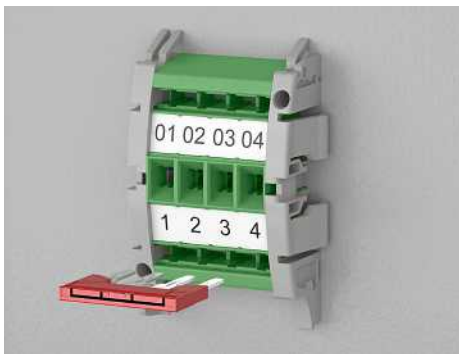

The automatic, leading transformer short circuit is configured with standard plug-in bridges in the plug-in test socket. Their positioning of the short-circuit bridges on the outside of the control cabinet is clearly visible.

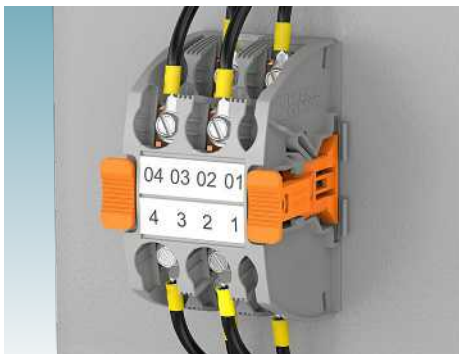

The plug-in test sockets have screw connection technology for ring cable lugs.

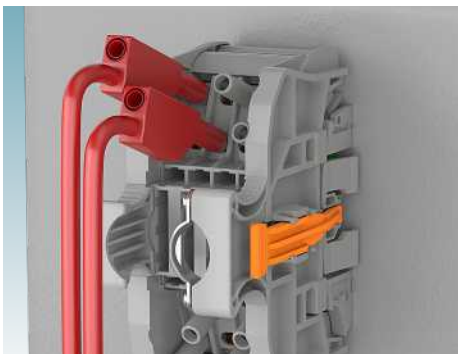

Space-saving test points with offset test sockets. Multi-position test cables can be securely fixed via a strain relief system.

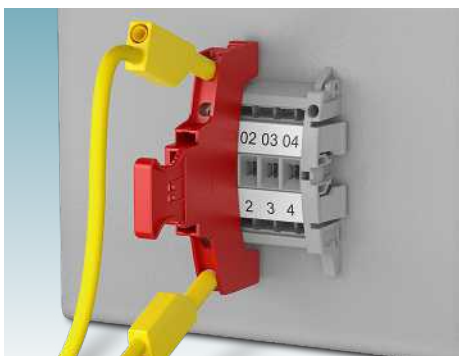

For special test processes you will receive service connectors with 4 mm test sockets with various numbers of positions. The test sockets can be used to connect measuring equipment with safety test cables, for example.

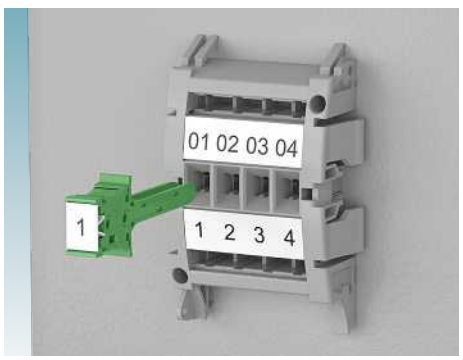

Service connectors are available with varying numbers of positions for special switching operations.

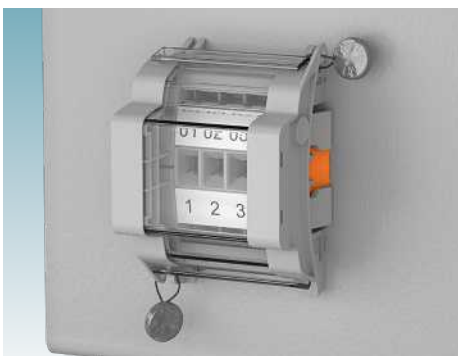

A transparent cover with sealing protects against unauthorized operation.

FAME 3 SL additional information

Operating state

The switching contact in the plug-in test socket is an N/C contact. In normal operation the contact is closed.

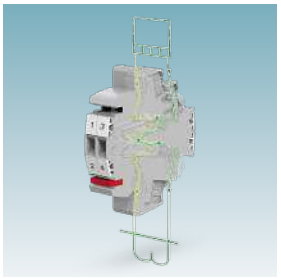

Normal operation
The N/C contact function enables normal operation without an additional operating plug. If desired, the plug-in zone can be covered and sealed with a transparent cover to prevent unauthorized access.

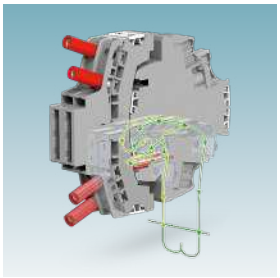

Transformer short circuit
When replacing the protective device or testing relays, the current transformer is short circuited upstream with plug-in bridges. The short circuit occurs automatically when the test plug is inserted.

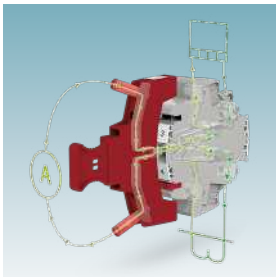

Test operation
If you use the single-position service plug, you can simply loop the test equipment into the current path via the 4 mm test sockets.

Plug-in test sockets

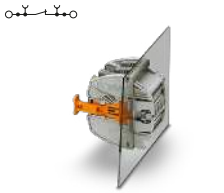

Type	Item no.	RSCWE 6-3/4SL	1029994
Mounting type		Panel mounting	
Connection method		Ring cable lug	
Number of positions		4	
Cross-section range mm² / AWG		0.5 mm² … 10 mm² / 24 … 8	
Current / voltage		24 A / 400 V	
Available numbers of positions		4, 6	

Test plug

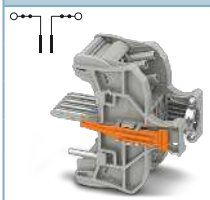

Type	Item no.	FTP-3/4SL	1030004
Plug type		Compact plug with latching	
Connection method		Cable lug connection	
Number of positions		4	
Cross-section range mm² / AWG		0.5 mm² … 2.5 mm² / 20 … 14	
Current / voltage		20 A / 400 V	
Available numbers of positions		4, 6	

Blind plug

Type	Item no.	FBP-3/4SL	1030010
Mounting type		–	
Connection method		–	
Number of positions		4	
Cross-section range mm² / AWG		–	
Current / voltage		–	
Available numbers of positions		4, 6	

FAME plug-in test systems

FAME 3 RACK plug-in test system

FAME 3 RACK, the plug-in test system without operating plug, combines complex switching operations for function tests of current transformers and voltage transducers, as well as tripping and signal contacts, into just one compact and space-saving block. The system operates in accordance with the N/C contact principle. An operating plug is not required.

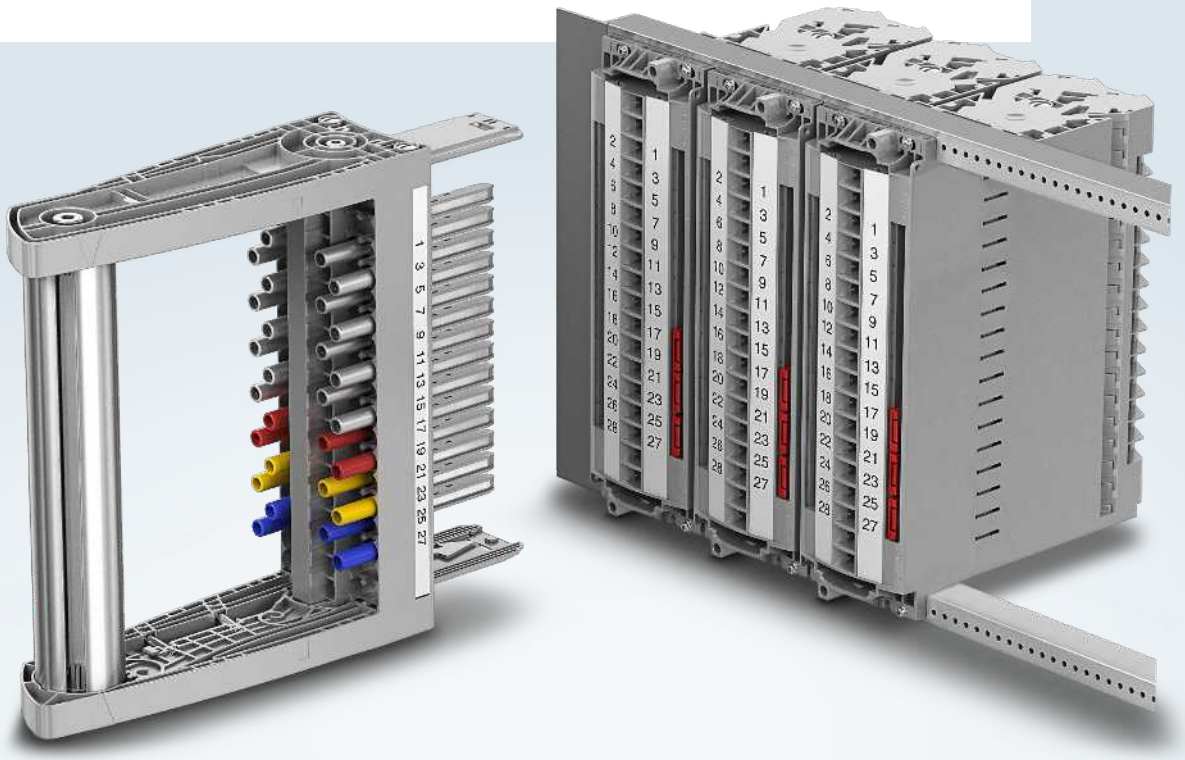

Your advantages

- Fast mounting with prefabricated module for two, three, and four rack units in a 19-inch rack
- Easy testing with forced switching sequence in just one block
- High level of safety with automatically leading transformer short circuit

FAME 3 RACK circuit example

Mains protection – circuit example with star-point grounding in just one plug-in test socket

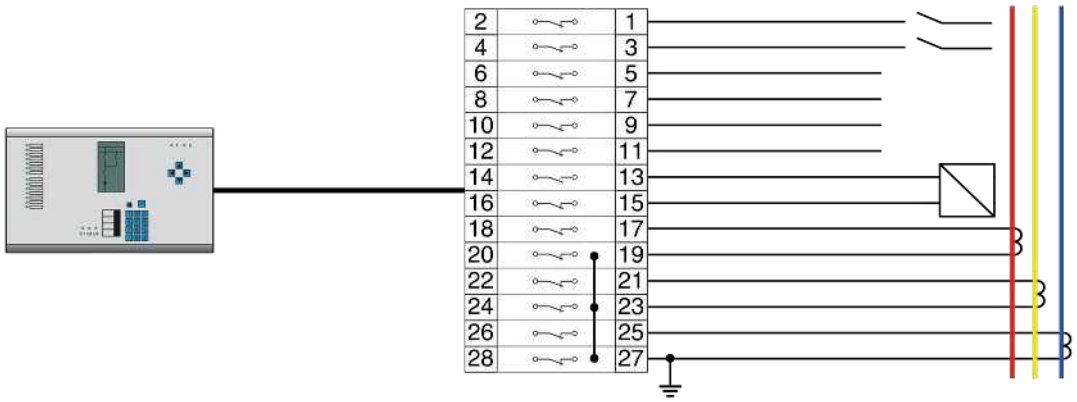

Plug-in test socket for 19" rack or panel mounting, with current transformer, voltage transformer, and signals

Plug-in test socket, blind plug

Type	Item no.	Required quantity
BTFE 6-3/14 4U	1029025	1
FBP-3F/14 4U	1029339	1
Plug-in bridge		
FBS 1/3/5-8	3032389	1
FBS 2-8	3030284	3

Test plugs with current transformer, voltage transformer, and signals

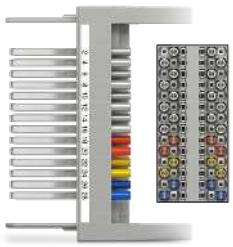

Test plug

Type	Item no.	Required quantity
FTP-3/14 4U	1029268	1

FAME 3 RACK product features

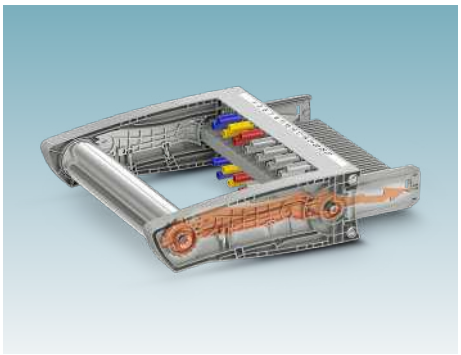

Programmed current transformer short circuits and switching operations are generated by consistent insertion and removal of the test plug. The rotary handle mechanism effectively avoids undefined contact states.

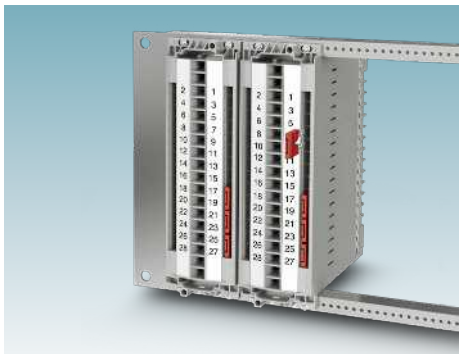

The automatic, leading transformer short circuit is established with plug-in bridges in the plug-in test socket The positioning on the outside of the control cabinet is clearly visible.

The short-circuit bridge can optionally be covered and labeled with standard marking material.

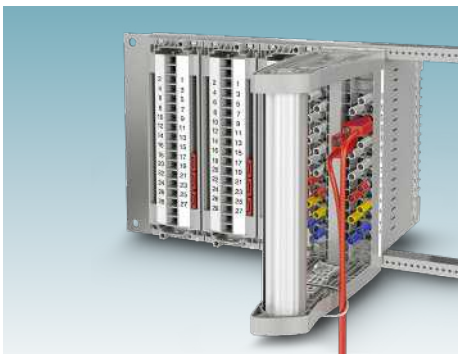

Space-saving test points with offset test sockets. The test cables can be easily fixed in place with cable ties.

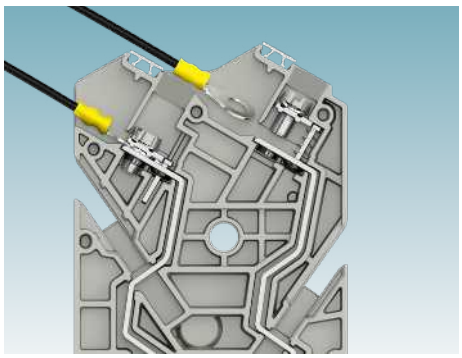

The plug-in test sockets feature BT connection technology with captive screws for ring and fork-type cable lugs.

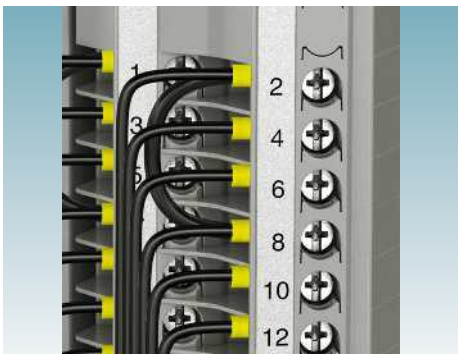

A 2-conductor connection can be implemented on the plug-in test socket contacts.

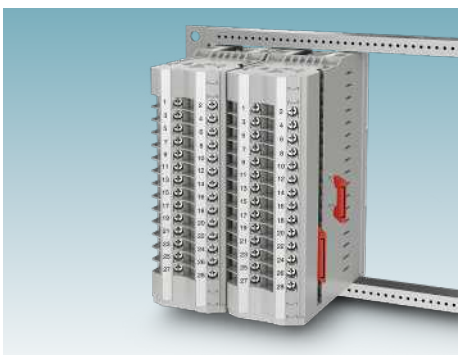

The star-point bridges are established with multi-position standard bridges of the CLIPLINE complete system.

A sealable cover with screw connection protects against soiling and unauthorized access to the plug-in test socket.

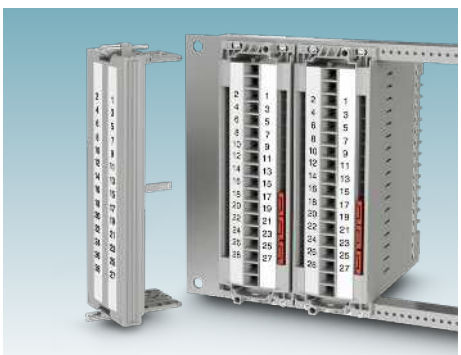

An optional cover with status contact provides monitoring for the presence of a cover. Removing the cover interrupts the monitoring signal.

FAME 3 RACK additional information

Operating state

The switching contact in the plug-in test socket is an N/C contact. In normal operation, the contact is closed.

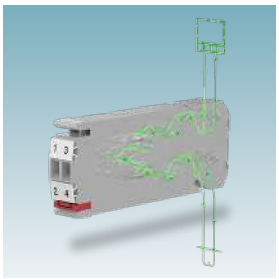

Normal operation
The N/C contact function enables normal operation without an additional operating plug. If desired, the plug-in zone can be covered and sealed with a blind plug to prevent unauthorized access.

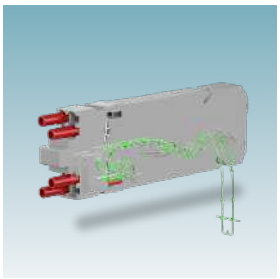

Transformer short circuit
For replacing the protective device or when testing relays, the current transformer can be short circuited upstream of the signal splitting by inserting a plug-in bridge in the plug-in test socket crossways. The short circuit occurs automatically when the test plug is inserted.

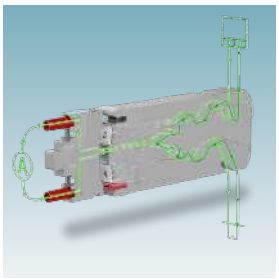

Test operation
The switching contacts are connected via test sockets.

Configurable switching points in the plug-in test sockets

The FAME 3 RACK system combines various switching operations in one block. To do this, the possible switching points can be configured by different individual plates in the plug-in test socket.
The individual plates are available in 3 different designs:

- L-plate = early switching point
- M-plate = delayed switching point
- S-plate = late switching point

This configuration allows all signals to be processed in one block. This allows all plug-in test sockets to be tested with just one type of plug.

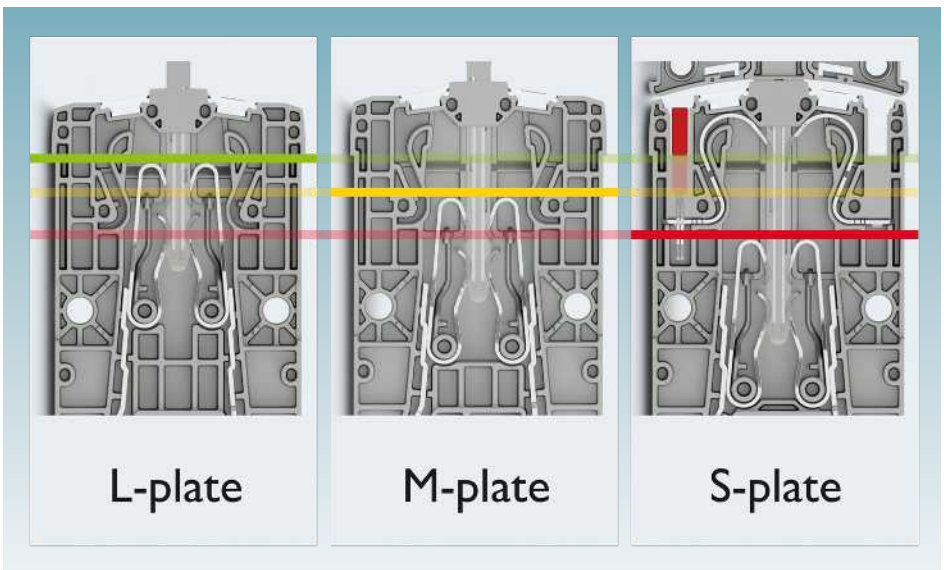

Switching points of the FAME 3 RACK plug-in test system

FAME 3 RACK additional information

19" rack mounting and panel mounting and rack panels

Thanks to the modularity of the FAME 3 RACK system, plug-in test sockets with from 2 to 4 rack units and various numbers of positions can be replicated.
– Up to 7 positions in 2 rack units (2U)
– Up to 12 positions in 3 rack units (3U)
– Up to 18 positions in 4 rack units (4U)
Unused contacts are filled with dummy plates. Direct mounting in front panels or doors from 4- to 25-position.

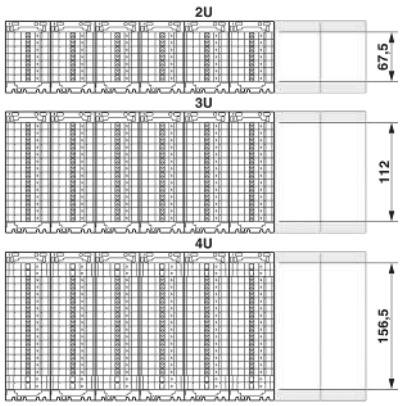

Rack units of the FAME 3 RACK

Auxiliary contact for status detection

The FAME 3 RACK system establishes the auxiliary contact in the same way as with the FAME 2 and FAME 3 systems via differently colored individual plates. The auxiliary contact also enables you to control the status remotely via SCADA.

The additional auxiliary contact of the FAME 3 RACK plug-in test system functions in accordance with the N/O (normally open) contact principle. This shows you whether a test plug or the sealable cover with status contact is plugged in or whether the system is in normal operation. This can be used to remotely determine if the plug-in test socket cover has been removed. Furthermore, unauthorized tampering can thus be determined.

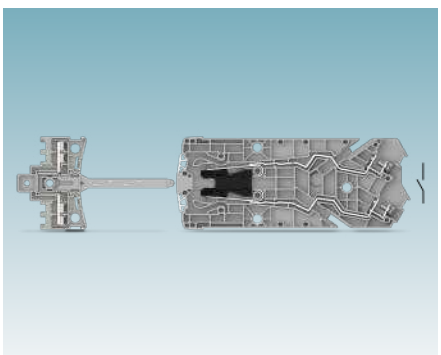

Auxiliary contact for status detection

Important note

The technical data in the product tables relates to the specified reference item. It may differ slightly for connection versions in some cases.

You will find the exact and complete data for the individual items in our online shop. There is also a list of corresponding accessories provided for each item.

FAME 3 RACK product overview

Plug-in test sockets

Type	Item no.	BTFE 6-3/14	1029252
Mounting type		Panel mounting	
Connection method		Ring cable lug	
Number of positions		14	
Cross-section range mm² / AWG		0.5 mm² … 6 mm² / 20 … 10	
Current / voltage		24 A / 400 V	
Available numbers of positions		4 … 25	

Type	Item no.	BTFE 6-3/14 4U AUX	1029025
Mounting type		19" rack mounting	
Connection method		Ring cable lug	
Number of positions		14	
Cross-section range mm² / AWG		0.5 mm² … 6 mm² / 20 … 10	
Current / voltage		24 A / 400 V	
Available numbers of positions		4 … 25	

Test plug

Type	Item no.	FTP-3F/14	1029269
Plug type		Rotary handle plug with defined latching positions	
Connection method		Cable lug connection	
Number of positions		14	
Cross-section range mm² / AWG		0.5 mm² … 2.5 mm² / 20 … 14	
Current / voltage		20 A / 400 V	
Available numbers of positions		4 … 25	

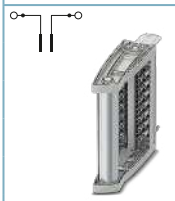

Type	Item no.	FTP-3F/14 4U	1029268
Plug type		Rotary handle plug with defined latching positions	
Connection method		Cable lug connection	
Number of positions		14	
Cross-section range mm² / AWG		0.5 mm² … 2.5 mm² / 20 … 14	
Current / voltage		20 A / 400 V	
Available numbers of positions		4 … 25	

Blind plug

Type	Item no.	FBP-3F/14	1029280
Mounting type		–	
Connection method		–	
Number of positions		14	
Cross-section range mm² / AWG		–	
Current / voltage		–	
Available numbers of positions		4 … 25	

Type	Item no.	FBP-3F/14 4U AUX	1029339
Mounting type		–	
Connection method		–	
Number of positions		14	
Cross-section range mm² / AWG		–	
Current / voltage		24 A / 250 V	
Available numbers of positions		4 … 25	

Open communication with customers and partners worldwide

Phoenix Contact is a global market leader based in Germany. We are known for producing future-oriented products and solutions for the electrification, networking, and automation of all sectors of the economy and infrastructure. With a global network reaching across more than 100 countries with over 20,000 employees, we maintain close relationships with our customers, something we believe is essential for our common success.

Our wide range of innovative products makes it easy for our customers to implement the latest technology in a variety of applications and industries. This especially applies to the target markets of energy, infrastructure, industry, and mobility.

You can find your local partner at

phoenixcontact.com

MNR 1364517/2022-06-15/00

ICC08-21.003.L3

PHOENIX CONTACT
INSPIRING INNOVATIONS